COMPONENT HARDWARE®

WALK-IN REFRIGERATION COMPONENTS

Member Organizations

Component Hardware Group is a proud member of the following organizations

Products shown in this catalog may be listed and/or certified by one or more of the following regulatory agencies and will be designated by the following marks

COMPONENT

DESCRIPTION	PAGE
A	
ACCESSORIES	EE27
D	
DOOR CLOSERS	EE14 - EE16
F	
FINISHING CAP, SNAP-IN	EE27
FOOT TREADLE	EE2
H	
HANDLES	EE1
HEX WRENCH	EE27
HINGES	EE6 - EE13
LIFT-OFF	EE9
HEAVY-DUTY	EE11 - EE13
HEAVY-DUTY CAM-RISE	EE10
INVESTMENT CAST	EE6 - EE7
OUTDOOR ENCLOSURE	EE8
L	
LATCHES	EE2 - EE3

DESCRIPTION	PAGE
M	
MOULDING, SNAP-ON	EE27
P	
PANEL FASTENERS	EE21 - EE26
PANIC BAR	EE5
POWER SPRING CONVERSION CARTRIDGE	EE10
S	
SAFETY LATCHES	EE2 - EE3
SAFETY RELEASE	EE4 - EE5
SILICONE SEALER	EE27
T	
TAPE, PRESSURE SENSITIVE INDUSTRIAL	EE27
THERMOMETERS	EE17
V	
VENT PORTS	EE18 - EE19
W	
WINDOW PORT	EE20

All photographs and illustrations are considered to be a representation of the actual item. In some cases there may be slight variations.
This catalog, copy, part numbers and unique method of illustrating products is copyrighted by Component Hardware Group, Inc. All rights reserved.
No portion of this catalog may be reproduced in any form or by any means in whole or in part, without the written consent of Component Hardware.
Component Hardware reserves the right to make any and all changes and to discontinue any of its products without notice.
Not responsible for typographical errors.
*May not be identical to competitors' products

© COPYRIGHT 2019 COMPONENT HARDWARE GROUP, INC.
#CAT-X025-EE 5/19 PRINTED IN U.S.A.

Hinge Selector Guide & Chart

COMPONENT HARDWARE HINGE SELECTOR GUIDE

This hinge selector is designed to assist you in choosing the correct Component Hardware hinges for commercial reach-in and walk-in refrigeration, foodservice equipment, transportation, industrial and other applications. The Load Chart below shows our recommended allowable load per pair of hinges for each hinge group.

The data supplied in this chart applies for normal operating conditions under static loading by door weight only. Other factors, such as positive or negative pressure, high gasket compression, lateral stress, corrosive or abrasive environments, or structural movement are not taken into account. It is the ultimate responsibility of the user to determine the suitability and capacity required for their specific application.

HOW TO USE THIS CHART

1. Locate the weight of your door in the far left column, headed DOOR WEIGHT.
2. Find the width of your door along the bottom of the chart.
3. Where the weight line and width column intersect, find the recommended hinge group code (A, B, etc.)
4. Select your hinges from the Component Hardware® hinge groups below.

NOTE: If exact dimensions and weight for your door is not shown, use the next higher width and weight.

Hinge Groups A-C Shown in REACH-IN, Section E
Hinge Groups D-J Shown in WALK-IN, Section EE

COMPONENT HARDWARE HINGE GROUPS

GROUP	HINGE MODEL NUMBERS
A	R20-1010, R20-1020, R45-1010, R40-1010, R42-2840, R42-2841, R42-2842, R42-2843, R42-2842-BR
B	R42-2000, R42-2855, R56 SERIES
C	R50-2850, R50-2850-SPO, R50-2850-BLK, R50-2850-SS, R50-2850-NL, R50-2850-BA
D	W58, W59, W60, W61 SERIES, W99-6015-SS, W99-4100-SSRH, W99-4100-SSLH, W55-1000, W56-1000
E	N/A
F	W99-2001, W99-2001-GE, W99-2063, W99-2063-G6, W77-1625
G	N/A
H	N/A
J	N/A

HOW TO DETERMINE OFFSET FOR HINGES AND LATCHES

With door closed, measure the distance from the jamb to the door face.

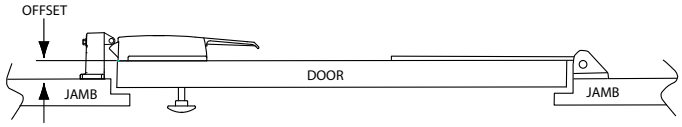

LOAD CHART

DOOR WEIGHTS kg.	DOOR WEIGHTS lb.																					
226.8	500	D	D	E	F	F	F	G	G	G	G	H	H	H	H	H	H	H	J	J	J	J
217.7	480	D	D	E	F	F	F	G	G	G	G	H	H	H	H	H	H	H	J	J	J	J
208.6	460	D	D	E	E	F	F	F	G	G	G	G	H	H	H	H	H	H	H	J	J	J
199.5	440	D	D	D	E	F	F	F	G	G	G	G	G	H	H	H	H	H	H	H	J	J
190.5	420	D	D	D	E	F	F	F	F	G	G	G	G	H	H	H	H	H	H	H	H	J
181.4	400	D	D	D	E	E	F	F	F	G	G	G	G	G	H	H	H	H	H	H	H	H
172.4	380	D	D	D	D	E	F	F	F	F	G	G	G	G	G	H	H	H	H	H	H	H
163.3	360	D	D	D	D	E	E	F	F	F	G	G	G	G	G	G	H	H	H	H	H	H
154.2	340	D	D	D	D	E	E	F	F	F	F	G	G	G	G	G	G	H	H	H	H	H
145.2	320	C	D	D	D	D	E	E	F	F	F	F	G	G	G	G	G	G	H	H	H	H
136.1	300	C	D	D	D	D	D	E	E	F	F	F	F	F	G	G	G	G	G	G	G	H
127.0	280	C	D	D	D	D	D	E	E	F	F	F	F	F	G	G	G	G	G	G	G	H
117.9	260	C	C	D	D	D	D	D	E	E	F	F	F	F	F	G	G	G	G	G	G	G
108.9	240	C	C	D	D	D	D	D	D	E	E	F	F	F	F	F	F	G	G	G	G	G
99.8	220	C	C	C	D	D	D	D	D	D	E	E	E	F	F	F	F	F	F	G	G	G
90.7	200	B	C	C	D	D	D	D	D	D	D	E	E	E	F	F	F	F	F	F	F	G
81.7	180	B	C	C	C	D	D	D	D	D	D	D	E	E	E	E	F	F	F	F	F	F
72.6	160	B	B	C	C	C	D	D	D	D	D	D	D	D	E	E	E	E	F	F	F	F
63.5	140	B	B	C	C	C	C	D	D	D	D	D	D	D	D	D	D	E	E	E	E	F
54.4	120	B	B	B	C	C	C	C	C	D	D	D	D	D	D	D	D	D	D	D	E	E
45.4	100	A	B	B	B	B	C	C	C	C	C	D	D	D	D	D	D	D	D	D	D	D
36.3	80	A	A	B	B	B	B	B	C	C	C	C	C	C	D	D	D	D	D	D	D	D
27.2	60	A	A	A	A	B	B	B	B	B	B	C	C	C	C	C	C	C	C	C	D	D
18.1	40	A	A	A	A	A	A	A	A	B	B	B	B	B	B	B	B	B	C	C	C	C
9.0	20	A	A	A	A	A	A	A	A	A	A	A	A	A	A	A	A	A	A	A	A	B
DOOR WIDTH	in.	12	15	18	21	24	27	30	33	36	39	42	45	48	51	54	57	60	63	66	69	72
	cm.	30.5	38.1	45.7	53.3	61.0	68.6	76.2	83.8	91.4	99.1	106.7	114.3	121.9	129.5	137.2	144.8	152.4	160.0	167.6	175.3	182.9

Walk-In Cooler Door Pull Handles

COMPONENT

A

W29 SERIES DOOR PULL HANDLES

- Heavy-duty high pressure zinc die-casting
- Satin chrome finish will not show fingerprints
- Polished chrome finish available
- Ergonomic design offers comfortable and easy door opening
- Non-handed-reversible feature for right or left hand swinging doors
- Concealed tamper-resistant mounting
- Ideal for all magnetic framed doors

REF.	MODEL NO.	DESCRIPTION	FINISH
A	W29-1000X	WITHOUT CYLINDER	SATIN CHROME
NOT SHOWN	W29-2000	WITHOUT CYLINDER	POLISHED CHROME

REPLACES* KASON #1229 & 1229C WITH Component Hardware QUALITY HARDWARE

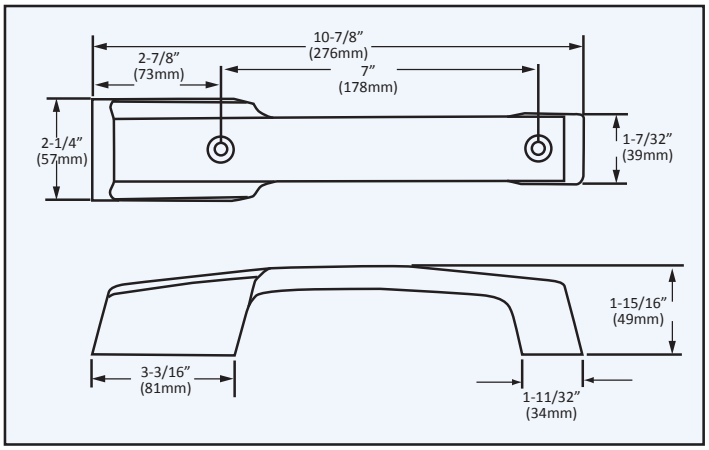

W30 SERIES HEAVY DUTY DOOR PULL

- Non-handed-reversible design fits right or left hand swinging doors
- Heavy-duty high pressure zinc die-cast construction
- Satin chrome finish will not show fingerprints
- Available in polished or satin chrome finishes
- Ergonomic design offers comfortable and easy door opening
- Concealed tamper-resistant mounting
- Ideal for all magnetic framed doors
- Locking models include inside safety release and unique padlock feature
- Safety release sized for 4" thick panel (other sizes available upon request)
- Styling coordinated with Component Hardware W59 Series door hinges

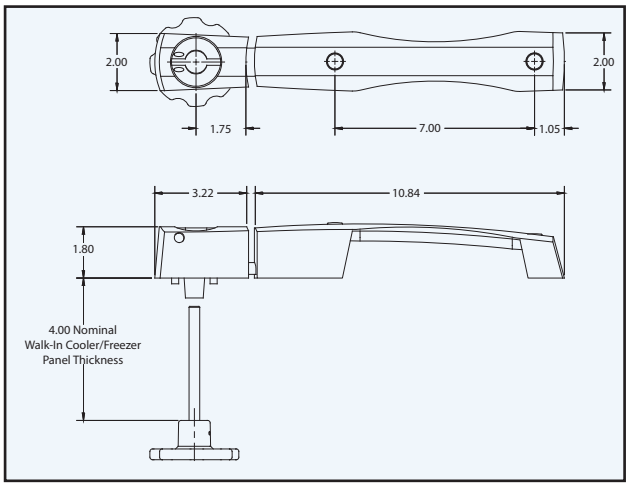

MODEL NO.	DESCRIPTION	FINISH
W30-1000	NO CYLINDER LOCK	SATIN CHROME
W30-1000-L	WITH CYLINDER LOCK	
W30-2000	NO CYLINDER LOCK	POLISHED CHROME
W30-2000-L	WITH CYLINDER LOCK	

W31 SERIES MAGNETIC DOOR BREAKER-ACTION HANDLE

- For Refrigeration Doors with Magnetic Gaskets
- Aluminum Sand Cast Construction
- Breaker Action Promotes Easy Door Opening
- Satin Finish
- Accepts Padlock
- Complete with Inside Safety Release
- For Doors with 1-3/8" (35mm) Offset
- Inside Release Designed for 4-5/8" (117mm) Door Thickness*

  * Other lengths available on application

MODEL NO. W31-1000X

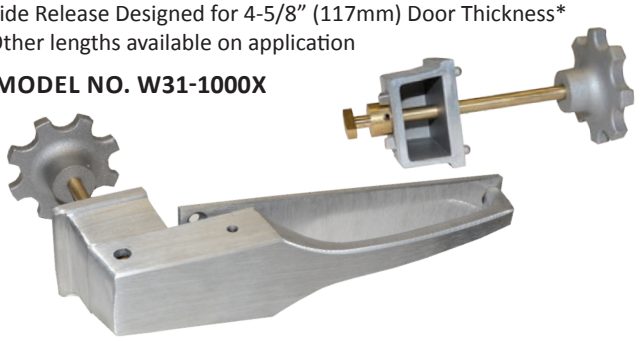

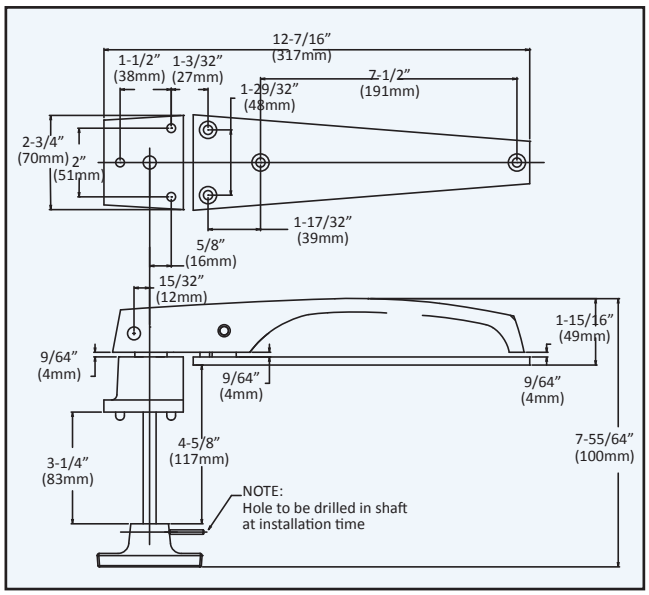

REPLACES* STANDARD KEIL (#2820 & 9180) AND DENT (D-83) WITH COMPONENT HARDWARE QUALITY HARDWARE

*May not be identical to competitors' products.

Walk-In Cooler Door Safety Latches

COMPONENT

W19 SERIES SAFETY LATCHES DESIGNED ESPECIALLY FOR WALK-IN REFRIGERATORS AND FREEZERS

• AVAILABLE IN POLISHED CHROME OR SATIN CHROME FINISH

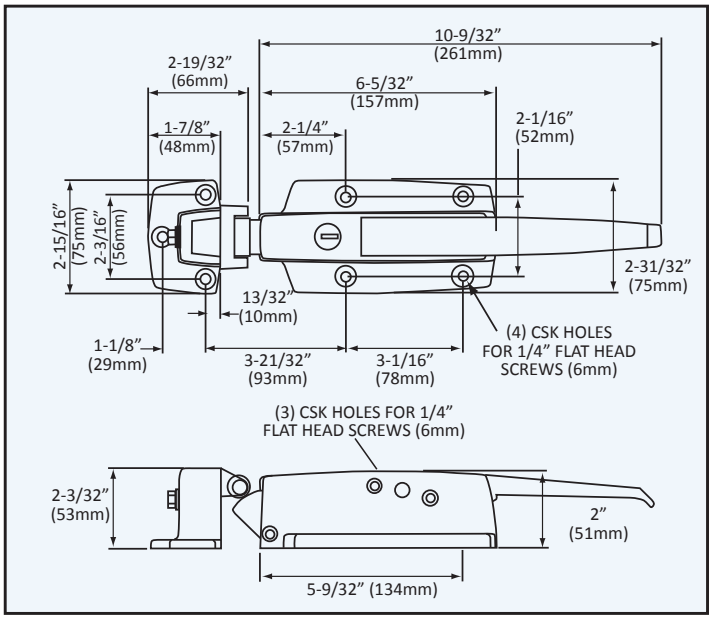

HEAVY- DUTY CONSTRUCTION... to provide the impact resistance required in heavy traffic areas. The latch body is constructed of reinforced die cast Zamak and furnished with a solid handle. All inner working parts and back plate are manufactured of solid stainless steel, unlike competitors models that can rust and leave unsightly stains on doors.

TAMPER PROOF DESIGN... eliminates pilferage of costly food stocks. Bolt cannot be retracted from the outside when latch is cylinder locked or padlocked. Yet with safety inside release mechanism occupants can safely exit even if latch is locked or padlocked.

FRICTION FREE OPERATION... provided by utilizing roller bolt retraction combined with roller strike action. Eliminates wear and allows doors to close smoothly and easily without slamming, while offering superb gasket compression.

EASY LIFT HANDLE... user friendly requires minimal hand pressure to completely retract bolt from strike. Low 1-1/2"(38mm) handle rise eliminates tugging and wrist twisting.

EASILY ADJUSTED STRIKE ASSEMBLY... offers variable offset adjustment permitting field adjustment for door gasket wear.

MODEL NO.	DESCRIPTION	FINISH	OFFSET
W19-1000	NO CYLINDER LOCK	POLISHED CHROME	-1/8" TO 3/8" (-3mm TO 10mm)
W19-1000-C	WITH CYLINDER LOCK	POLISHED CHROME	
W19-1000-SN	NO CYLINDER LOCK	SATIN CHROME	
W19-1000-C-SN	WITH CYLINDER LOCK	SATIN CHROME	
W19-1500	NO CYLINDER LOCK	POLISHED CHROME	3/4" TO 1-5/8" (19mm TO 41mm)
W19-1500-C	WITH CYLINDER LOCK	POLISHED CHROME	
W19-2000	NO CYLINDER LOCK	POLISHED CHROME	1-5/8" TO 2-1/2" (41mm TO 64mm)
W19-2000-C	WITH CYLINDER LOCK	POLISHED CHROME	

REPLACES* KASON #58, 59 AND 77 WITH COMPONENT HARDWARE QUALITY HARDWARE

FOOT TREADLE

For Safe & Convenient Hands-Free Door Operation

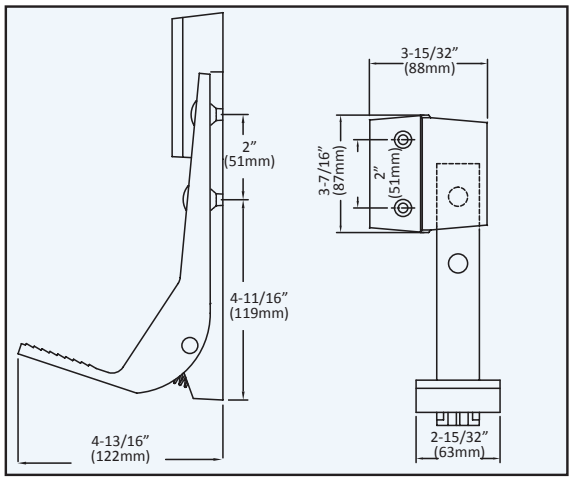

REPLACES* STANDARD KEIL (#2890 & 9183), DENT (D-82) AND KASON (1230) WITH COMPONENT HARDWARE QUALITY HARDWARE

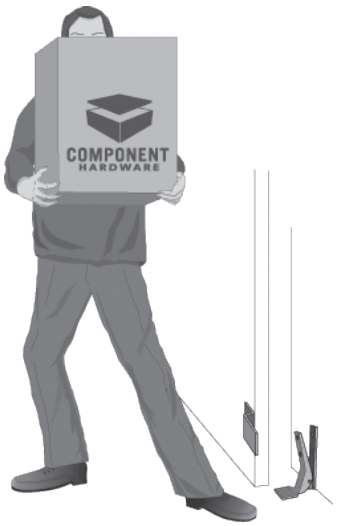

- Non-skid pedal surface
- Stainless Steel pin and low friction bearings
- Reversible for right or left hand door swing
- Length–7-3/4" (197mm)
- Material–Aluminum
- Brushed Aluminum Finish
- Offset–Flush
- Screw Holes– 1/4" (6mm) Hole, 82˚ Countersunk

MODEL NO. W50-1000

*May not be identical to competitors' products.

W38 SERIES SAFETY LATCHES
DESIGNED ESPECIALLY FOR WALK-IN REFRIGERATORS AND FREEZERS

COMPONENT

- **AVAILABLE IN POLISHED CHROME OR SATIN CHROME FINISH**

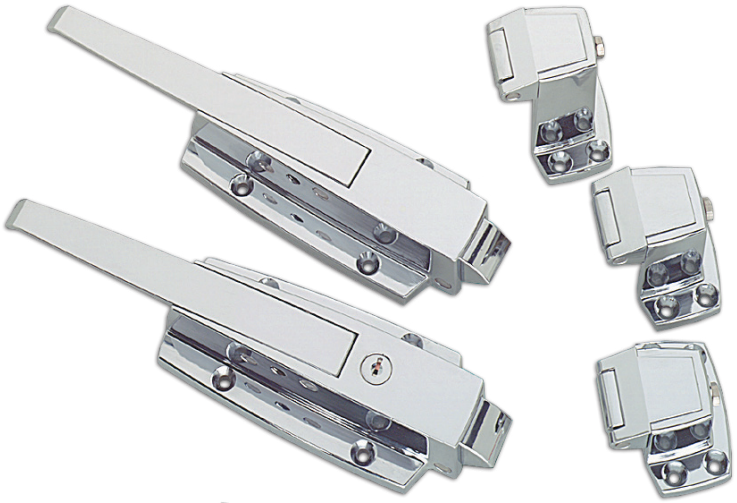

SUPER HEAVY-DUTY CONSTRUCTION... and large body profile latch is designed to withstand the most rigorous of commercial kitchen or cold room environments. Latch handle is produced of lifetime **SOLID FORGED BRASS** construction. All inner working parts and back plate are manufactured of solid stainless steel which provide a rugged, smooth and rust-free operation.

MODEL NO.	DESCRIPTION	FINISH	OFFSET
W38-1000	NO CYLINDER LOCK	POLISHED CHROME	-1/8" TO 3/8" (-3mm TO 10mm)
W38-1000-C	WITH CYLINDER LOCK	POLISHED CHROME	
W38-1000-SN	NO CYLINDER LOCK	SATIN CHROME	
W38-1000-C-SN*	WITH CYLINDER LOCK	SATIN CHROME	
W38-1500	NO CYLINDER LOCK	POLISHED CHROME	3/4" TO 1-5/8" (19mm TO 41mm)
W38-1500-C	WITH CYLINDER LOCK	POLISHED CHROME	
W38-1500-SN	NO CYLINDER LOCK	SATIN CHROME	
W38-1500-C-SN*	WITH CYLINDER LOCK	SATIN CHROME	
W38-2000	NO CYLINDER LOCK	POLISHED CHROME	1-5/8" TO 2-1/2" (41mm TO 64mm)
W38-2000-C	WITH CYLINDER LOCK	POLISHED CHROME	

REPLACES* KASON #56 WITH COMPONENT HARDWARE QUALITY HARDWARE
*NOTE: Non-stock item

- **EASY LIFT HANDLE**
- **HEAVY- DUTY CONSTRUCTION**
- **FRICTION-FREE OPERATION**
- **EASILY ADJUSTED STRIKE ASSEMBLY**
- **TAMPER PROOF DESIGN**

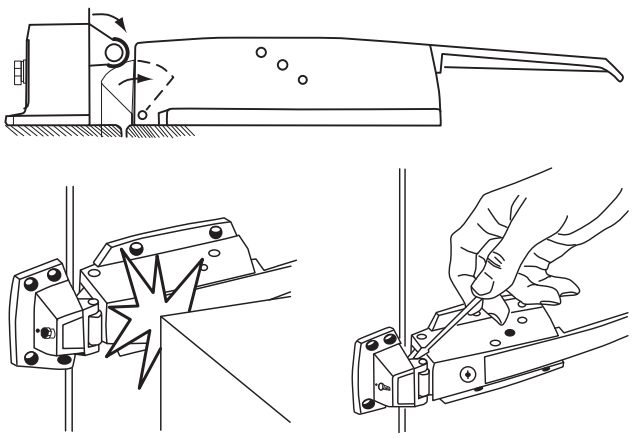

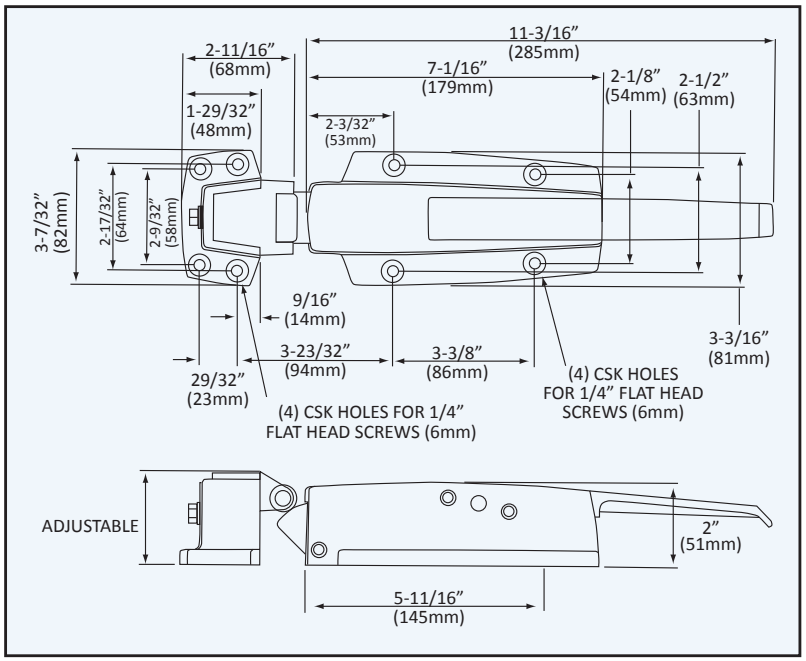

*May not be identical to competitors' products.

COMPONENT

W28 SERIES INSIDE SAFETY RELEASES FOR RECESSED MOUNT

- **SURFACE MOUNT AND FLUSH MOUNT STYLES** are available
- **GLOW-IN-THE- DARK KNOB** meets all industry safety standards
- Durable **SOLID FIBERGLASS REINFORCED** polyester pushrod provides years of smooth, safe, frost-free operation and eliminates conductivity of cold air
- Short Stroke engineering provides **IMMEDIATE INSIDE RELEASE** even if latch is cylinder locked, padlocked or both
- **RECESSED DESIGN** protects knob from exposure to traffic of heavy crates, hand trucks and loading vehicles
- **ALL STANDARD DOOR THICKNESSES** are available

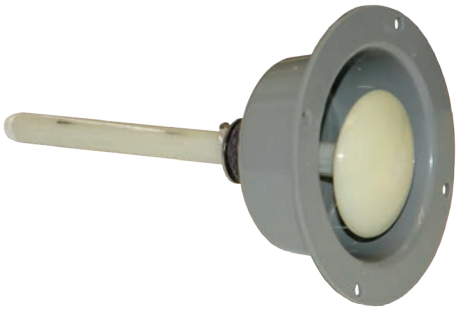

SPECIFICATIONS

KNOB: GLOW-IN-THE-DARK SAFETY GREEN THERMOPLASTIC
FLANGE: GREY THERMOPLASTIC
PUSH ROD: NON-CONDUCTIVE FIBERGLASS REINFORCED POLYESTER
NOTE: INSIDE RELEASES MUST BE ORDERED SEPARATELY

RECESSED MOUNT

MODEL NO.	DOOR THICKNESS
W28-3400X	4" (102mm)
W28-3800X	8" (203mm)

REPLACES* KASON #489 WITH Component Hardware QUALITY HARDWARE

ADDITIONAL ROD SIZES FOR VARYING DOOR THICKNESSES AVAILABLE ON APPLICATION

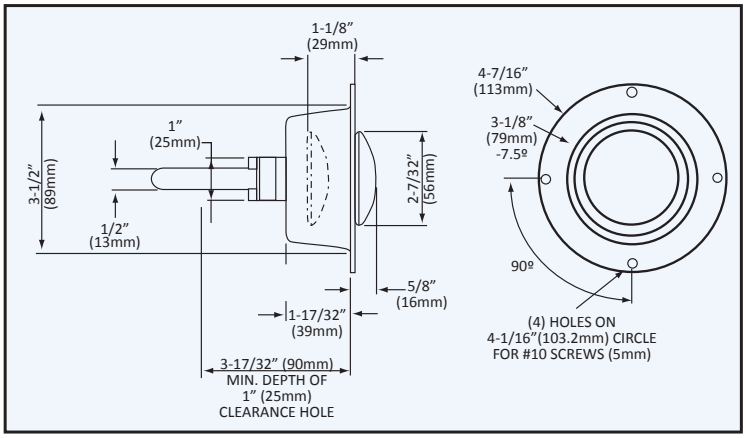

W28 SERIES INSIDE SAFETY RELEASES FOR SURFACE MOUNT

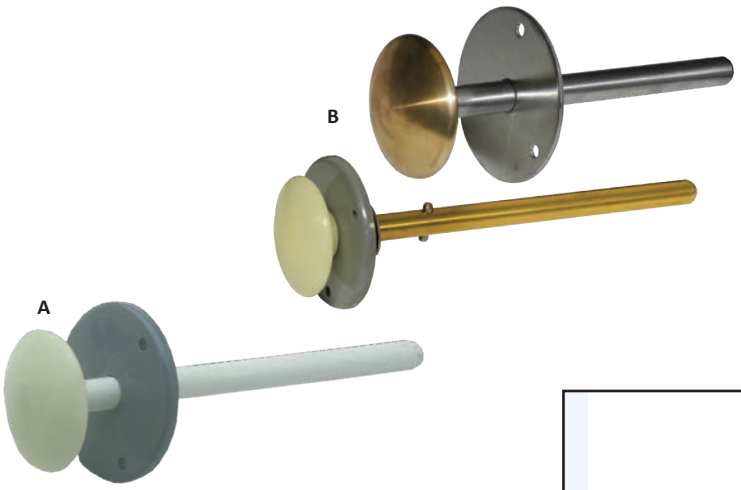

REF. A

SURFACE MOUNT

MODEL NO.	DOOR THICKNESS
W28-2325X	3-1/4" (83mm)
W28-2400X	4" (102mm)
W28-2600X	6" (152mm)
W28-2800X	8" (203mm)

REF. B

STAINLESS STEEL INSIDE RELEASES AND BRASS RODS (SPECIAL ORDER)

MODEL NO.	DESCRIPTION
W28-2400-SSX	S/S ROD FOR 4" (102mm) WALL WITH BRASS KNOB
W28-2300-SSX	S/S ROD FOR 3" (76mm) WALL WITH BRASS KNOB
W28-2605	BRASS ROD FOR 6" (152mm) WALL

REPLACES* KASON #487, 481 AND 482 WITH COMPONENT HARDWARE QUALITY HARDWARE

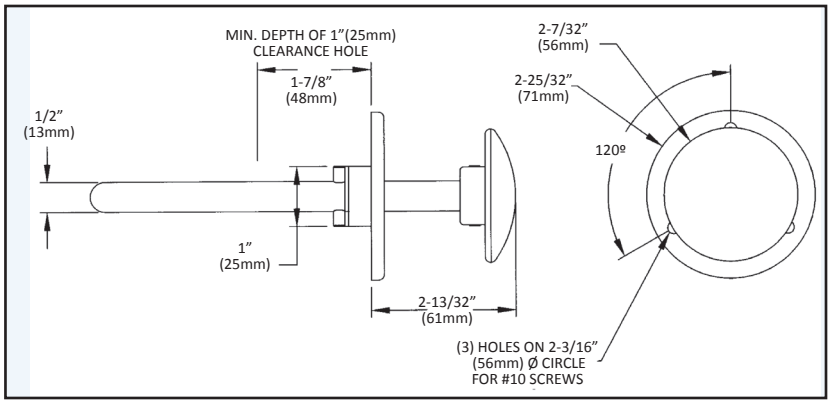

*May not be identical to competitors' products.

COMPONENT

PANIC BAR W/INSIDE SAFETY RELEASE

MODEL NO. W28-1000
FOR 3" DOOR

MODEL NO. W28-1200
FOR 4" DOOR

- Sturdy aluminum construction
- Glow-in-the-dark reflective strip
- For use with Component Hardware W19, W38 and W99 Series
  refrigeration safty latches
- Glow-in-the-dark reflective strip
- Reversable for left and right hand door applications
- Sturdy aluminum construction
- Supplied with stainless steel push rod

PADLOCK HASP WITH INSIDE SAFETY RELEASE

MODEL NO. W29-5000-4X

- For 4" (102mm) wall and flush door
- External parts are 300 series stainless steel with satin finish
- Plate can be locked in lock/open as well as locked/closed position
- Concealed mounting holes utilize #10 or #12 flat head screw
- Plastic glow in the dark inside release knob on solid brass rod

Simple padlocking hasp secures any walk-in cooler or freezer door.

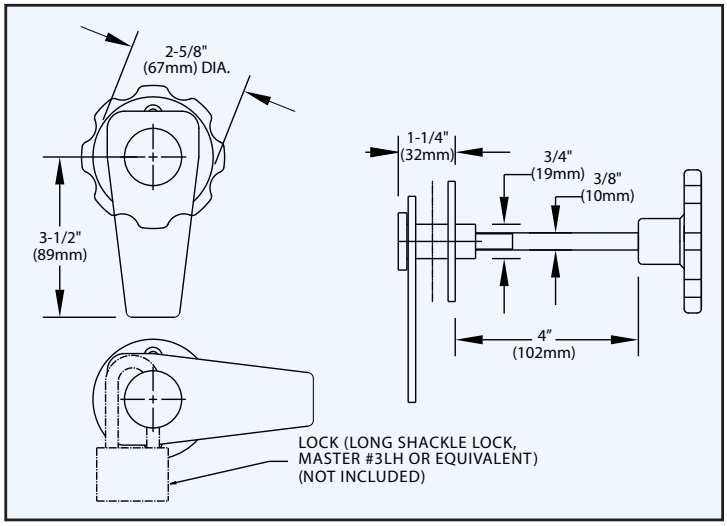

Solid Stainless Steel Investment Cast Hinges

COMPONENT

W99 SERIES INVESTMENT CAST HINGES

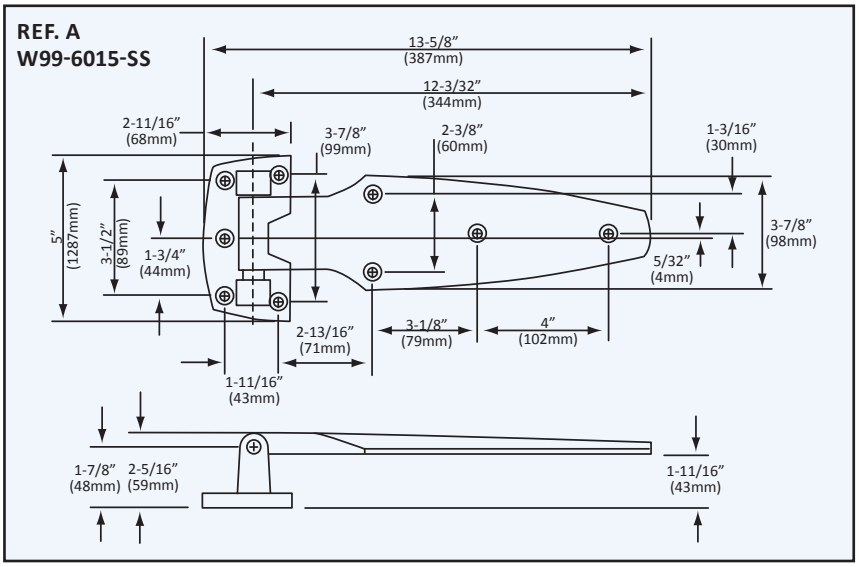

- The **ONLY ALL STAINLESS HINGE** available in today's market
- Field Reversible
- Solid stainless steel construction throughout
- Ideal for highly corrosive and humid environments
- Ideal for marine applications, outside cold rooms and commercial refrigerated truck bodies
- Rugged heavy-duty lifetime construction
- Tamper-proof design

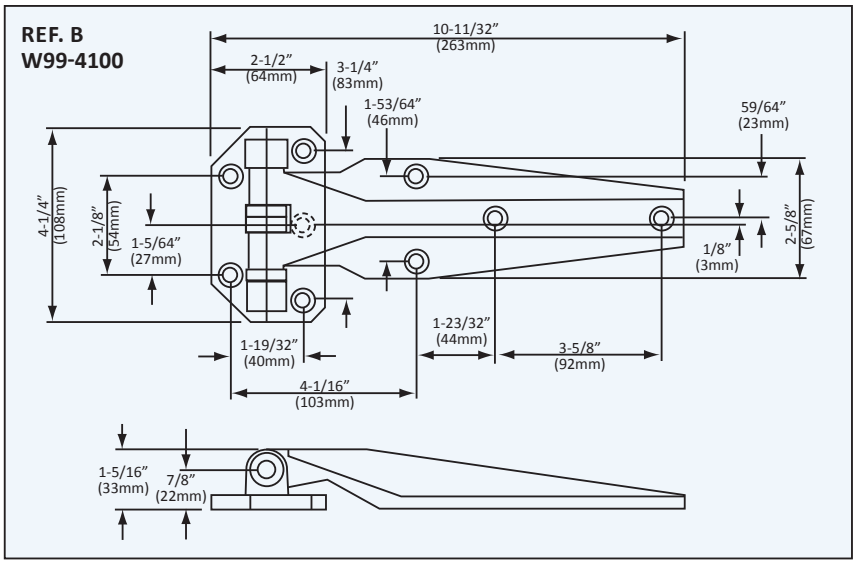

MODEL NO.	DESCRIPTION
W99-6015-SS HINGE	1-5/8" (41mm) OFFSET
W99-4100-SSRH HINGE	RIGHT HAND FLUSH
W99-4100-SSLH HINGE	LEFT HAND FLUSH

W99-4100 REPLACES* KASON #1241, W99-6015-SS and DENT (D1P) WITH COMPONENT HARDWARE QUALITY HARDWARE

*May not be identical to competitors' products.

Solid Stainless Steel Investment Cast Latches

COMPONENT

W99 SERIES INVESTMENT CAST SAFETY LATCHES

- The **ONLY ALL STAINLESS LATCH** available in today's market
- Solid stainless steel construction throughout
- Ideal for highly corrosive and humid environments
- Ideal for marine applications, outside cold rooms and commercial refrigerated truck bodies
- Rugged heavy-duty lifetime construction
- Tamper-proof design
- Padlock feature on all latches for maximum security
- Cylinder lock model also available

MODEL NO.	DESCRIPTION
W99-3800-SS LATCH	FLUSH TO 3/8" OFFSET
W99-3800-SS-C	LATCH WITH LOCK
W99-3815-SS LATCH	3/4" TO 1-5/8" OFFSET
W99-3815-SS-C	LATCH WITH LOCK
W99-3820-SS LATCH	1-5/8" TO 2-1/2" OFFSET

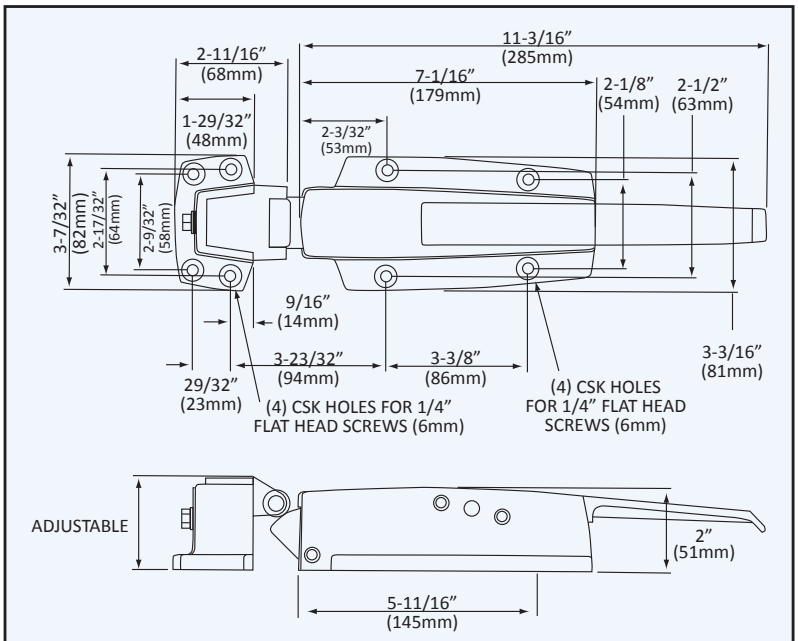

REPLACES* KASON #0556 WITH COMPONENT HARDWARE QUALITY HARDWARE

*May not be identical to competitors' products.

Hardware Designed Specifically for Outdoor Structures

COMPONENT

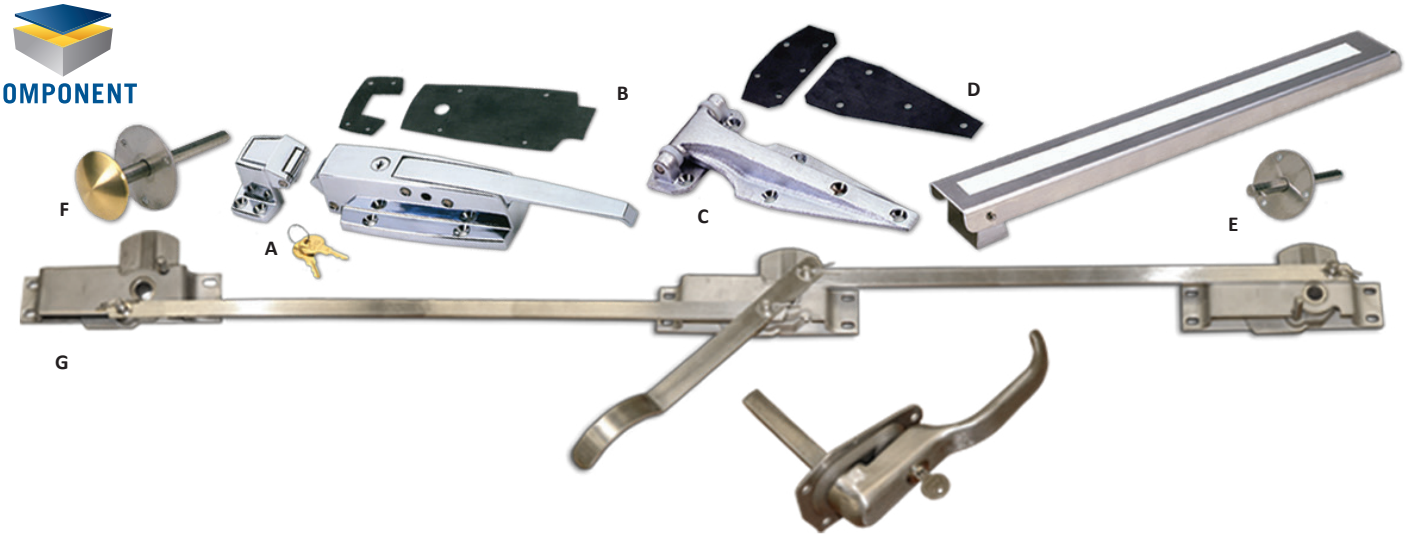

SPECIALTY HARDWARE FOR OUTDOOR APPLICATION

• IDEAL FOR HIGHLY CORROSIVE AND HUMID ENVIRONMENTS • IDEAL FOR MARINE APPLICATIONS, OUTSIDE COLD ROOMS AND COMMERCIAL REFRIGERATED TRUCK BODIES • RUGGED HEAVY-DUTY LIFETIME CONSTRUCTION • TAMPER-PROOF DESIGNS

REF.	MODEL NO.	DESCRIPTION
A	W38-1000-C	LATCH AND STRIKE
B	W99-0100-L	LATCH GASKET
C	W99-2001	HINGE, CHROME PLATED BRASS, FLUSH w/BRONZE BUSHINGS
Not Shown	W99-2063	HINGE, CHROME PLATED BRASS, 5/8" OFFSET w/BRONZE BUSHINGS
D	W99-0100-H	HINGE GASKET
E	W28-1000	PANIC BAR W/INSIDE RELEASE
E	W28-1000	STAINLESS STEEL INSIDE RELEASE FOR 3" (76 mm) DOOR THICKNESS
Not Shown	W28-2215-SSX	STAINLESS STEEL INSIDE RELEASE FOR 2.15" (55 mm) DOOR THICKNESS
G	W37-3000-SS*	STAINLESS STEEL THREE POINT LATCH

*NOT NSF LISTED

ALSO AVAILABLE AS COMPLETE ASSEMBLIES:

W38-1000-C-GE	WALK-IN LATCH KIT INCLUDES FLUSH MOUNT POLISHED CHROME LATCH W/CYLINDER LOCK, GASKET SET & S/S INSIDE RELEASE FOR 3" DOOR THICKNESS
W38-1600LSSGE	WALK-IN LATCH KIT INCLUDES FLUSH MOUNT S/S LATCH W/ CYLINDER LOCK, GASKET SET & INSIDE RELEASE
W38-4216LSSGE	WALK-IN LATCH KIT INCLUDES 2.43" OFFSET S/S LATCH W/ CYLINDER LOCK, GASKET SET & S/S INSIDE RELEASE
W38-6000-C-GE	WALK-IN LATCH KIT INCLUDES FLUSH MOUNT POLISHED CHROME LATCH W/CYLINDER LOCK, GASKET SET & PANIC BAR INSIDE RELEASE
W99-2001-GE	HINGE KIT CHROME PLATED BRASS, FLUSH MOUNT, GASKETS INCLUDED w/BRONZE BUSHINGS
W99-2063-GE	HINGE KIT CHROME PLATED BRASS, 5/8" OFFSET, INCLUDES GASKETS w/BRONZE BUSHINGS

W38 SERIES HEAVY-DUTY WALK-IN DOOR SAFETY LATCHES

• Available in polished chrome or satin chrome finish • Super heavy-duty construction and large body profile latch designed to withstand the most rigorous conditions • Handle is solid forged brass, inner working parts and back plate are solid stainless steel for smooth and rust-free operation

REPLACES* KASON #56 WITH COMPONENT HARDWARE QUALITY HARDWARE

W99 SERIES HEAVY-DUTY HINGE

• Available in chrome plated brass • Available in flush or 5/8" (16mm) offset • Heavy-duty construction to withstand rigorous conditions • Models available with OILITE® bronze bushings for added strength & durablilty

W28 SERIES STAINLESS STEEL INSIDE RELEASE
W28-1000 PANIC BAR W/INSIDE RELEASE

• Sturdy aluminum construction • Glow-in-the-dark reflective strip

W28-2300-SSX STAINLESS STEEL INSIDE RELEASE

• For 3" (76 mm) door thickness • Additional sizes for varying door thicknesses available on application

REPLACES* KASON #481 WITH COMPONENT HARDWARE QUALITY HARDWARE

W37-3000-SS STAINLESS STEEL THREE POINT LATCH

• Positive dead bolt locking • Holds door closed in 3 places– top, center & bottom to minimize leakage and save energy • Strongest latch made • Spring loaded over-center latching • Positive inside release mechanism

STAINLESS STEEL THREE POINT LATCH

MODEL NO. W37-3000-SS

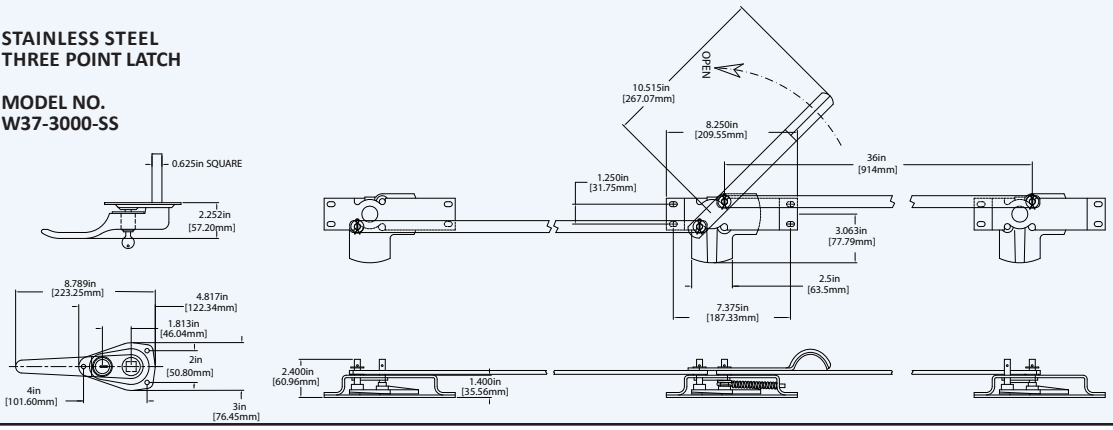

*May not be identical to competitors' products.

COMPONENT

W60 SERIES LIFT-OFF HINGE WITH CAM RISE ACTION

LONG STRAP POLISHED CHROME FINISH

MODEL NO.	OFFSET
W60-1000	FLUSH
W60-1012	1/8" (3mm)
W60-1025	1/4" (6mm)
W60-1037	3/8" (10mm)
W60-1112	1-1/8" (29mm)
W60-1125	1-1/4" (32mm)
W60-1137	1-3/8" (35mm)
W60-1150	1-1/2" (38mm)
W60-1162	1-5/8" (41mm)
W60-1175	1-3/4" (45mm)
W60-1187	1-7/8" (48mm)
W60-1200	2" (51mm)

REPLACES* KASON #1245 AND STANDARD KEIL #2860
WITH Component Hardware QUALITY HARDWARE

LONG STRAP SATIN CHROME FINISH

W60-2000	FLUSH
W60-2025	1/4" (6mm)
W60-2112	1-1/8" (29mm)
W60-2137	1-3/8" (35mm)

SHORT STRAP POLISHED CHROME FINISH

W60-1000-S	FLUSH
W60-1012-S	1/8" (3mm)
W60-1025-S	1/4" (6mm)
W60-1037-S	3/8" (10mm)

COORDINATED STYLING
Design coordinated with clean, unobtrusive lines to aesthetically complement the **W19 AND W38 SERIES EASY ACTION SAFETY LATCH** or other contemporary breaker hardware, latches or pulls.

REVERSIBLE
Can be utilized for any right or left hand door application. Conversion is easily accomplished without tools.

UNIQUE CAM ACTION
Contains self-lubricating nylon and Delrin cam rise components to provide **GLIDE-ACTION** door operation. These components reduce door sweep gasket wear regardless of floor irregularity and provide constant overclose pressure against the door gasket assuring a positive seal. A **HOLD-OPEN** feature is built into the cam allowing the door to remain open at 140°. The door will automatically return to a closed position if opened less than 140°.

LIFT-OFF CAPABILITY
Doors can be removed quickly without tools or hinge disassembly. This allows for knockdown shipment and eliminates costly on-site installation and service time.

DURABLE
Constructed of die-cast Zamak with built-in structural reinforcing ribs for extraordinary strength and years of trouble-free operation.

ALL TYPE CONSTRUCTION
This series is designed to meet the universal requirements of all types of cooler construction especially foam.

UNIVERSAL MOUNTING HOLES
Allows REPLACEMENT* with all competitors models without redrilling or reinforcing.

SPECIFICATIONS

OFFSET:	Flush thru 2" (51mm)
FINISH:	Polished Chrome or Satin Chrome Finish
MATERIAL:	High pressure die cast Zamak
MOUNTING HOLES:	Drilled and countersunk for #14 screws (6mm)

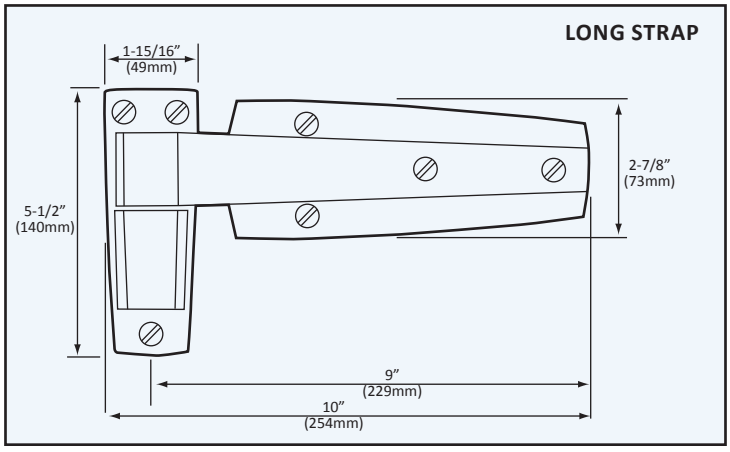

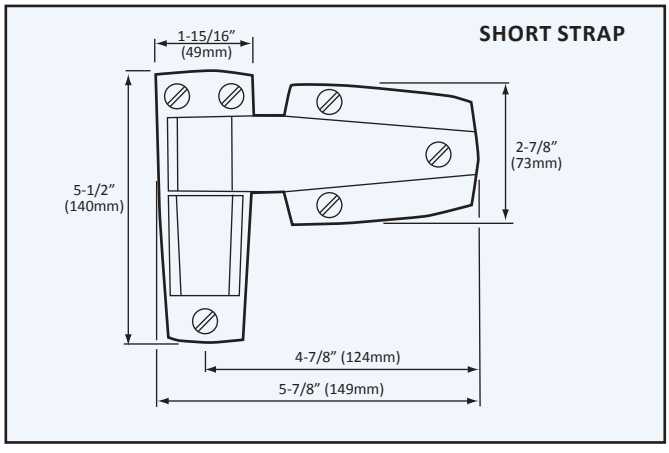

*May not be identical to competitors' products.

Power Spring Conversion Cartridge Kit

COMPONENT

EASY INSTALLATION

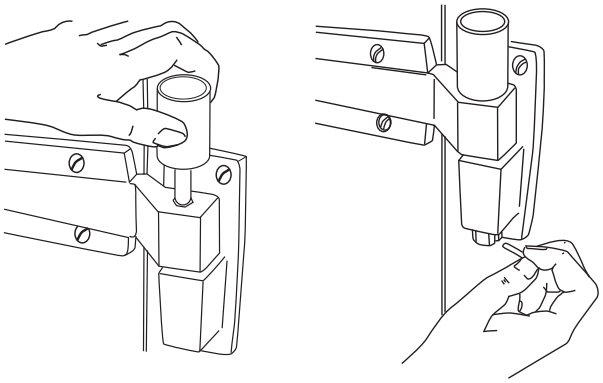

POWER SPRING CONVERSION CARTRIDGE KIT

MODEL NO. W62-0001 Polished Chrome Finish
MODEL NO. W62-2001 Satin Chrome Finish

- ACCELERATES DOOR CLOSING
- INCREASES DOOR PRESSURE
- EASY INSTALLATION
- REDUCED INVENTORY

The energy saving power spring conversion cartridge is designed for easy installation into the W60 Series Lift-off Hinge. It provides increased door speed closure and maintains constant gasket pressure to eliminate refrigerated air loss. Unlike competitor's spring hinges, this optional cartridge kit can be simply added at any time to the W60 Series Lift-off Hinge eliminating costly inventories.
The cartridge kit contains a heavy duty chrome vanadium spring to assure years of trouble-free operation. The assembly may be used for either left or right hand doors, permitting reduced inventory for both hinges and conversion kits. When required, the cartridge may be easily disengaged for door removal.

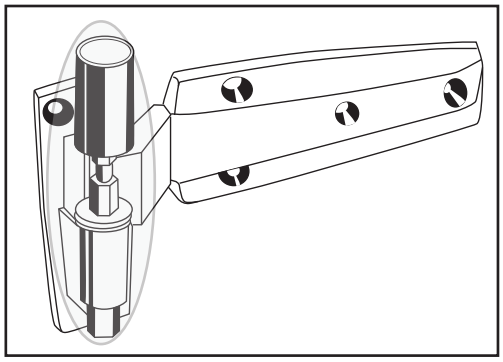

Note: This conversion cartridge eliminates the lift-off capability of the W60 SERIES LIFT-OFF HINGE.
REPLACES* KASON #1248 AND STANDARD-KEIL #2862 WITH COMPONENT HARDWARE QUALITY HARDWARE

HEAVY-DUTY CAM-RISE HINGE

MODEL NO. W77-1375 1-3/8" Offset
MODEL NO. W77-1625 1-5/8" Offset

- For cold storage, supermarket and other heavy-duty walk-in applications
- Reversible for left or right-hand doors without disassembly
- Self-closing cam-rise action
- Heavy-duty zinc-plated steel strap with satin finish
- Black epoxy-coated die cast flange
- Drilled for 3/8" mounting hardware
- Other offsets available upon application

*May not be identical to competitors' products.

Heavy Duty Walk-In Door Hinges

COMPONENT

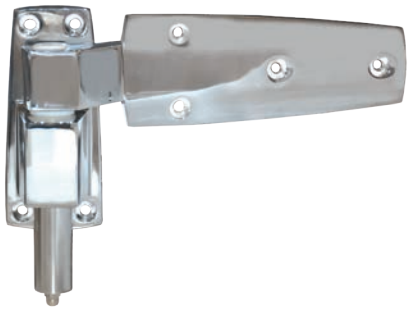

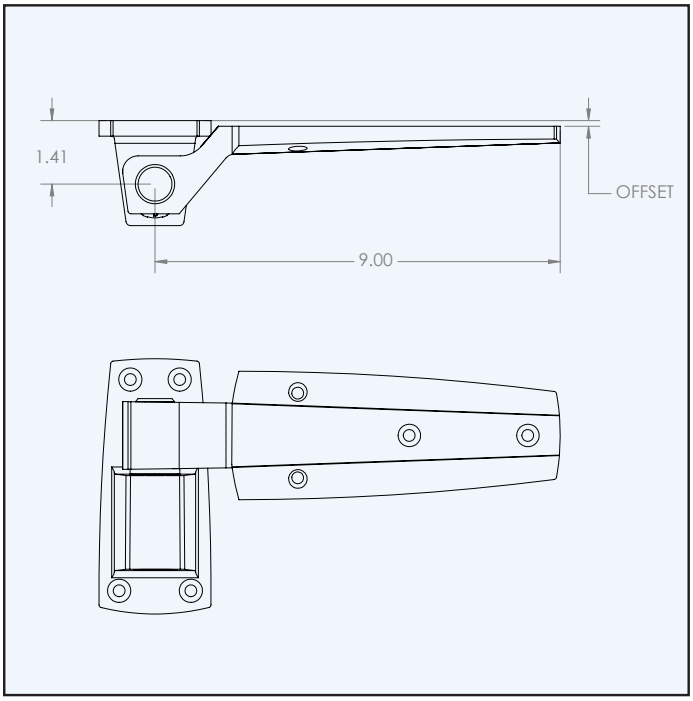

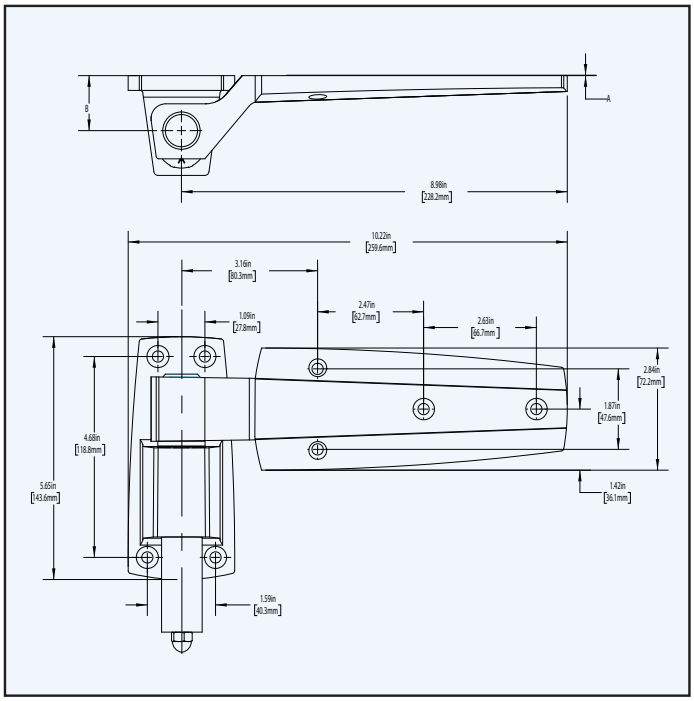

FLEXIBLE DESIGN
- Easily converted from left to right hand swing without tools
- Lift-off capability - doors can be removed quickly without tools or hinge disassembly
- Available in polished chrome or satin chrome finish
- Universal mounting holes allow replacement with all competitors' models without redrilling
- Styling coordinated with Component Hardware W30 Series door pulls

UNIQUE CAM ACTION
- Self-lubricating nylon and Delrin cam rise reduce door sweep gasket wear
- Provides constant overclose pressure against door gasket to ensure a positive seal
- Built-in hold open feature allows door to remain open at 140°
- Door automatically returns to a closed position if opened less than 140°

W61 SERIES - HINGE HEAVY DUTY WALK-IN COOLER/FREEZER

WITHOUT BUILT-IN SPRING		WITH BUILT-IN SPRING			
MODEL NO. POLISHED CHROME	MODEL NO. SATIN CHROME	MODEL NO. POLISHED CHROME	MODEL NO. SATIN CHROME	A	B
W61-1000	W61-2000	W61-3000	W61-4000	FLUSH	1.28" (32.5mm)
W61-1012	W61-2012	W61-3012	W61-4012	0.12" (3.1mm)	1.41" (35.8mm)
W61-1025	W61-2025	W61-3025	W61-4025	0.25" (6.4mm)	1.53" (38.9mm)
W61-1037	W61-2037	W61-3037	W61-4037	0.38" (9.7mm)	1.66" (42.2mm)
W61-1112	W61-2112	W61-3112	W61-4112	1.12" (28.5mm)	1.28" (32.5mm)
W61-1125	W61-2125	W61-3125	W61-4125	1.25" (31.8mm)	1.41" (35.8mm)
W61-1137	W61-2137	W61-3137	W61-4137	1.38" (35.1mm)	1.53" (38.9mm)
W61-1150	W61-2150	W61-3150	W61-4150	1.5" (38.1mm)	1.66" (42.2mm)
W61-1162	W61-2162	W61-3162	W61-4162	1.62" (41.2mm)	1.28" (32.5mm)
W61-1175	W61-2175	W61-3175	W61-4175	1.75" (44.5mm)	1.41" (35.8mm)
W61-1187	W61-2187	W61-3187	W61-4187	1.87" (47.5mm)	1.53" (38.9mm)
W61-1200	W61-2200	W61-3200	W61-4200	2.0" (51mm)	1.66" (42.2mm)

*May not be identical to competitors' products.

Heavy Duty Non-Adjustable Walk-In Door Hinges

COMPONENT

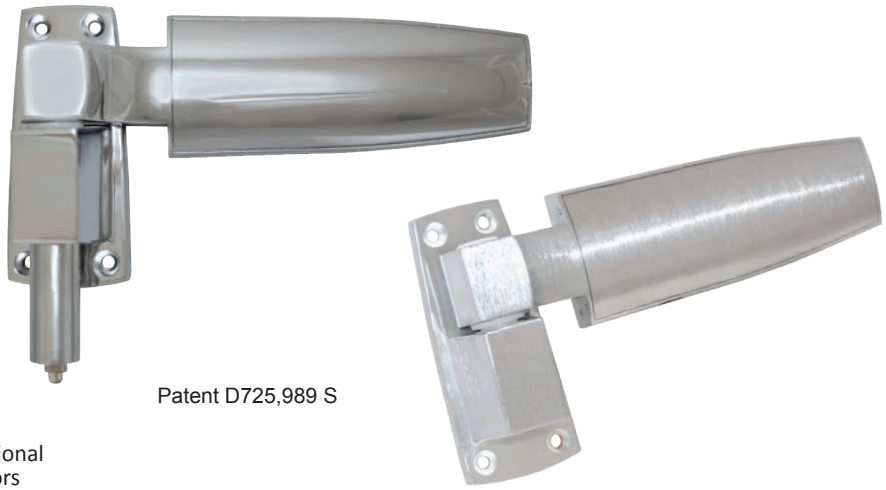

Patent D725,989 S

FLEXIBLE DESIGN

- Spring assist feature provides additional closing force for use on heavier doors
- Easily converted from left to right hand swing without tools
- Lift-off capability - doors can be removed quickly without tools or hinge disassembly
- Available in Polished Chrome or Satin Chrome finish or black covers
- Removable hinge cover conceals mounting holes for clean appearance
- Hinge covers may be personalized with custom colors, logos, etc. for a distinctive look
- Universal mounting holes allow replacement with all competitors' models without redrilling
- Styling coordinated with Component Hardware W30 Series door pulls

UNIQUE CAM ACTION

- Self-lubricating nylon and Delrin cam rise reduce door sweep gasket wear
- Provides constant overclose pressure against door gasket to ensure a positive seal
- Built-in hold open feature allows door to remain open at 140°
- Door automatically returns to a closed position if opened less than 140°

W58 SERIES - NON-ADJUSTABLE HINGEHEAVY DUTY WALK-IN COOLER/FREEZER

WITHOUT SPRING		WITH SPRING			
MODEL NO. POLISHED CHROME	MODEL NO. SATIN CHROME	MODEL NO. POLISHED CHROME	MODEL NO. SATIN CHROME	A	B
W58-1000	W58-2000	W58-3000	W58-4000	FLUSH	1.28" (32.5mm)
W58-1012	W58-2012	W58-3012	W58-4012	0.12" (3.1mm)	1.41" (35.8mm)
W58-1025	W58-2025	W58-3025	W58-4025	0.25" (6.4mm)	1.53" (38.9mm)
W58-1037	W58-2037	W58-3037	W58-4037	0.38" (9.7mm)	1.66" (42.2mm)
W58-1112	W58-2112	W58-3112	W58-4112	1.12" (28.5mm)	1.28" (32.5mm)
W58-1125	W58-2125	W58-3125	W58-4125	1.25" (31.8mm)	1.41" (35.8mm)
W58-1137	W58-2137	W58-3137	W58-4137	1.38" (35.1mm)	1.53" (38.9mm)
W58-1150	W58-2150	W58-3150	W58-4150	1.5" (38.1mm)	1.66" (42.2mm)
W58-1162	W58-2162	W58-3162	W58-4162	1.62" (41.2mm)	1.28" (32.5mm)
W58-1175	W58-2175	W58-3175	W58-4175	1.75" (44.5mm)	1.41" (35.8mm)
W58-1187	W58-2187	W58-3187	W58-4187	1.87" (47.5mm)	1.53" (38.9mm)
W58-1200	W58-2200	W58-3200	W58-4200	2.0" (51mm)	1.66" (42.2mm)

Note: Standard hinge cover matches hinge. For black plastic cover, add "-CBLK" to model number.

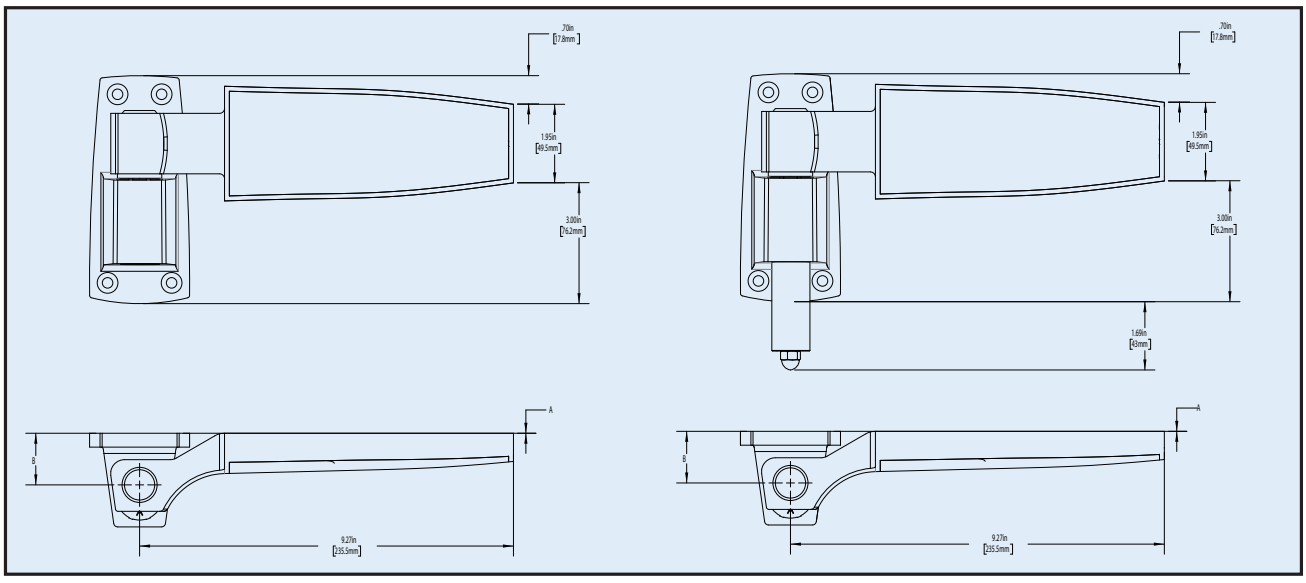

*May not be identical to competitors' products.

Heavy Duty Adjustable Walk-In Door Hinges

COMPONENT

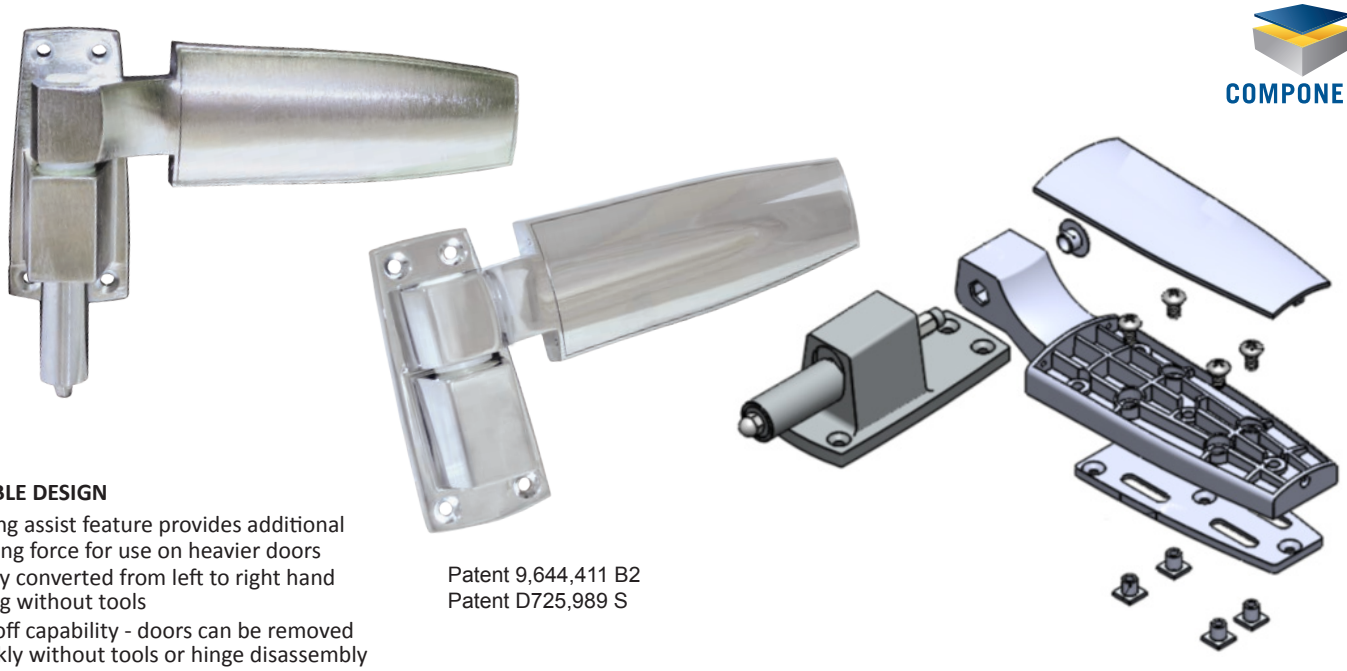

Patent 9,644,411 B2
Patent D725,989 S

FLEXIBLE DESIGN

- Spring assist feature provides additional closing force for use on heavier doors
- Easily converted from left to right hand swing without tools
- Lift-off capability - doors can be removed quickly without tools or hinge disassembly
- Unique internal adjusting bracket facilitates quick and easy in-place adjustment for door sag
- Available in Polished Chrome or Satin Chrome finish or black covers
- Removable hinge cover conceals mounting holes for clean appearance
- Hinge covers may be personalized with custom colors, logos, etc. for a distinctive look
- Universal mounting holes allow replacement with all competitors' models without redrilling
- Styling coordinated with Component Hardware W30 Series door pulls

UNIQUE CAM ACTION

- Self-lubricating nylon and Delrin cam rise reduce door sweep gasket wear
- Provides constant overclose pressure against door gasket to ensure a positive seal
- Built-in hold open feature allows door to remain open at 140°
- Door automatically returns to a closed position if opened less than 140°

W59 SERIES - ADJUSTABLE HINGE HEAVY DUTY WALK-IN COOLER/FREEZER

WITHOUT SPRING		WITH SPRING			
MODEL NO. POLISHED CHROME	MODEL NO. SATIN CHROME	MODEL NO. POLISHED CHROME	MODEL NO. SATIN CHROME	A	B
W59-1000	W59-2000	W59-3000	W59-4000	FLUSH	1.28" (32.5mm)
W59-1012	W59-2012	W59-3012	W59-4012	0.12" (3.1mm)	1.41" (35.8mm)
W59-1025	W59-2025	W59-3025	W59-4025	0.25" (6.4mm)	1.53" (38.9mm)
W59-1037	W59-2037	W59-3037	W59-4037	0.38" (9.7mm)	1.66" (42.2mm)
W59-1112	W59-2112	W59-3112	W59-4112	1.12" (28.5mm)	1.28" (32.5mm)
W59-1125	W59-2125	W59-3125	W59-4125	1.25" (31.8mm)	1.41" (35.8mm)
W59-1137	W59-2137	W59-3137	W59-4137	1.38" (35.1mm)	1.53" (38.9mm)
W59-1150	W59-2150	W59-3150	W59-4150	1.5" (38.1mm)	1.66" (42.2mm)
W59-1162	W59-2162	W59-3162	W59-4162	1.62" (41.2mm)	1.28" (32.5mm)
W59-1175	W59-2175	W59-3175	W59-4175	1.75" (44.5mm)	1.41" (35.8mm)
W59-1187	W59-2187	W59-3187	W59-4187	1.87" (47.5mm)	1.53" (38.9mm)
W59-1200	W59-2200	W59-3200	W59-4200	2.0" (51mm)	1.66" (42.2mm)

Note: Standard hinge cover matches hinge. For black plastic cover, add "-CBLK" to model number.

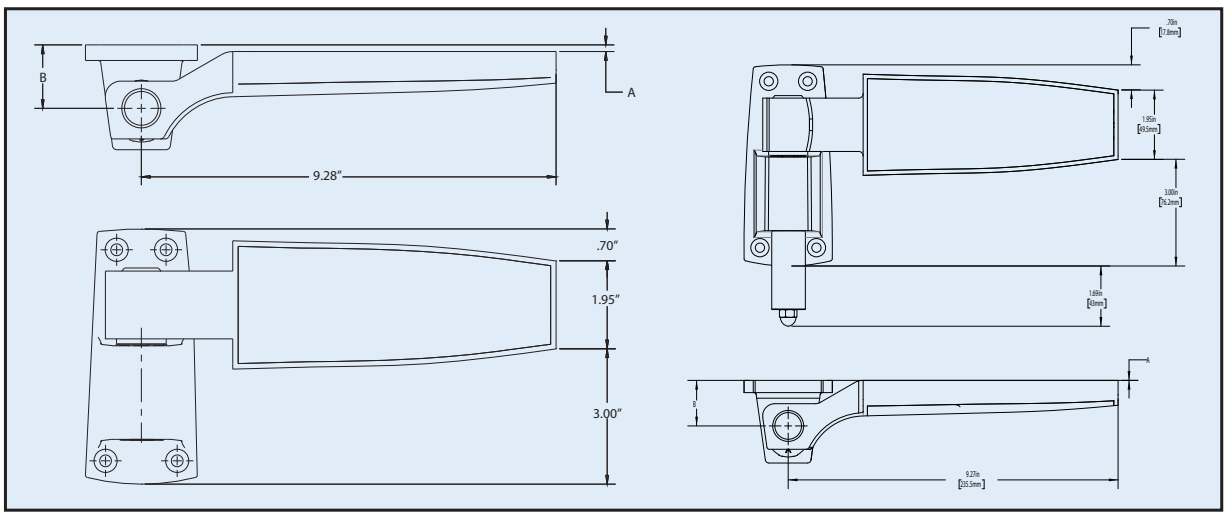

*May not be identical to competitors' products.

Door Closers for Walk-In Refrigerators & Freezers

COMPONENT

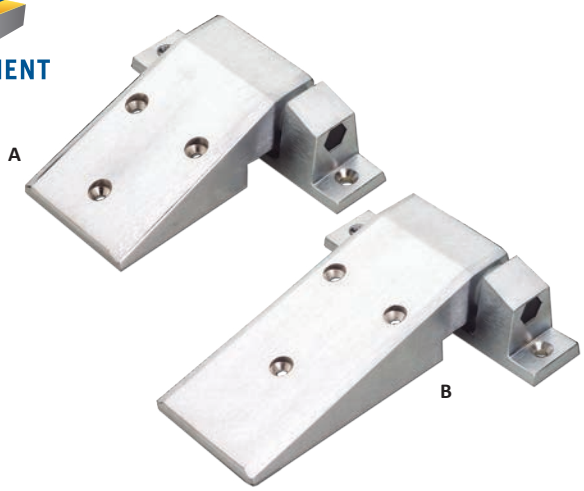

REVERSIBLE SELF-CLOSING HINGE WITH CAM-RISE CONSTRUCTION

- Contemporary design and heavy precision die-cast construction provides durable, dependable service
- Self-closing, self-lubricating, self-rising cam provides smooth quiet closing action
- Lift-off and reversible non-handed cam design allows for easy field installation
- Special cam design feature provides a hold open dwell at 100° opening to facilitate loading and unloading of cooler
- Available in both long and short strap models
- Special satin chrome finish offers years of clean, trouble-free use while matching related hardware and cooler door coverings
- Polished chrome finish available
- Optional spring assist cartridge assembly available for accelerated and positive door closing

REF.	MODEL NO.	A	B	FINISH
A	**W55-1000** SHORT FLANGE ASS'Y, FLUSH OFFSET	1-15/16" (49mm)	5-5/16" (135mm)	SATIN CHROME
B	**W56-1000** LONG FLANGE ASS'Y, FLUSH OFFSET	2-1/2" (64mm)	7-5/16" (186mm)	SATIN CHROME

MODEL NO. W55-0001 OPTIONAL POWER SPRING KIT FOR USE WITH W55/56 HINGES

REPLACES* KASON #1255 & 1256 WITH COMPONENT HARDWARE QUALITY HARDWARE

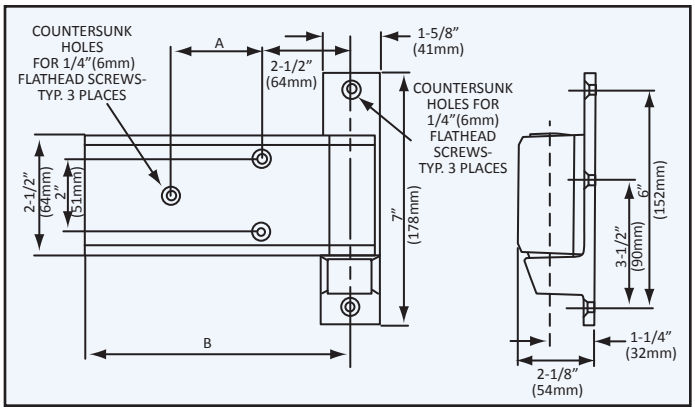

NSF COMPONENT

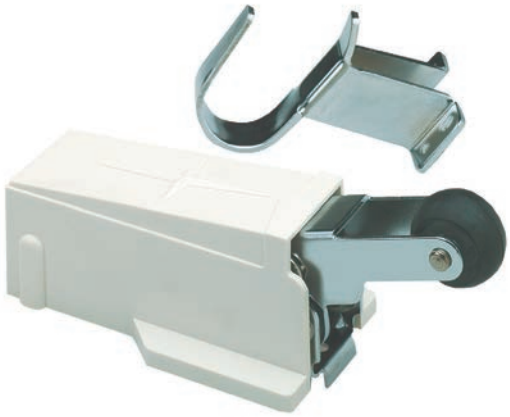

HYDRAULIC DOOR CLOSER FOR WALK-IN REFRIGERATORS AND FREEZERS

• RUGGED CONSTRUCTION
• DEPENDABLE ACTION
• CONTEMPORARY DESIGN
• ECONOMICAL

- Overcomes difficulties experienced in closing a refrigerator or freezer door against the air that compresses inside
- Actually pulls refrigerator or freezer door closed while allowing the compressed air in the unit to slowly escape, then holds door firmly closed to eliminate loss of refrigerated air
- Where severe temperature and pressure conditions combine to force doors open, responds to the released pressure and immediately recloses the door
- Universal mounting holes, permit easy REPLACEMENT* of competitive models, complete with white snap-on dust cover.

MODEL NO. R55-1010 FOR FLUSH DOORS

MODEL NO. R55-1020 FOR 1-1/8" (29mm) OFFSET DOORS

REPLACES* KASON #1093 AND STANDARD-KEIL #2882 WITH COMPONENT HARDWARE QUALITY HARDWARE

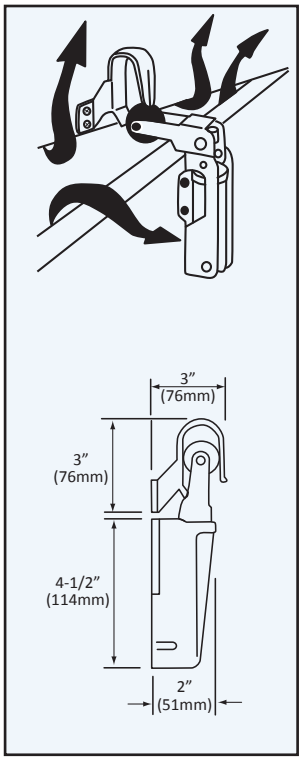

*May not be identical to competitors' products.

Door Closers for Walk-In Refrigerators & Freezers

COMPONENT

HEAVY-DUTY HYDRAULIC SNUGGER™

MODEL NO. W94-1010 – Flush Offset, Stainless Steel
MODEL NO. W94-1020 – 1-1/8" (29mm) Offset, Stainless Steel
MODEL NO. W94-2010 – Flush Offset, Chrome Plated Steel
MODEL NO. W94-2020 – 1-1/8" (29mm) Offset, Chrome Plated Steel

- Snugger's powerful gas-loaded hydraulic cylinder provides positive, smooth door closure
- Unique cover design provides for easy installation and concealed mounting
- Cushioned rubber roller and unique spring design offers smooth, quiet, trouble-free operation
- Available in popular flush and 1-1/8" offsets
- Interchangeability - unique concealed mounting hole pattern allows Snugger to easily replace all existing models in the field
- Mounting template provided

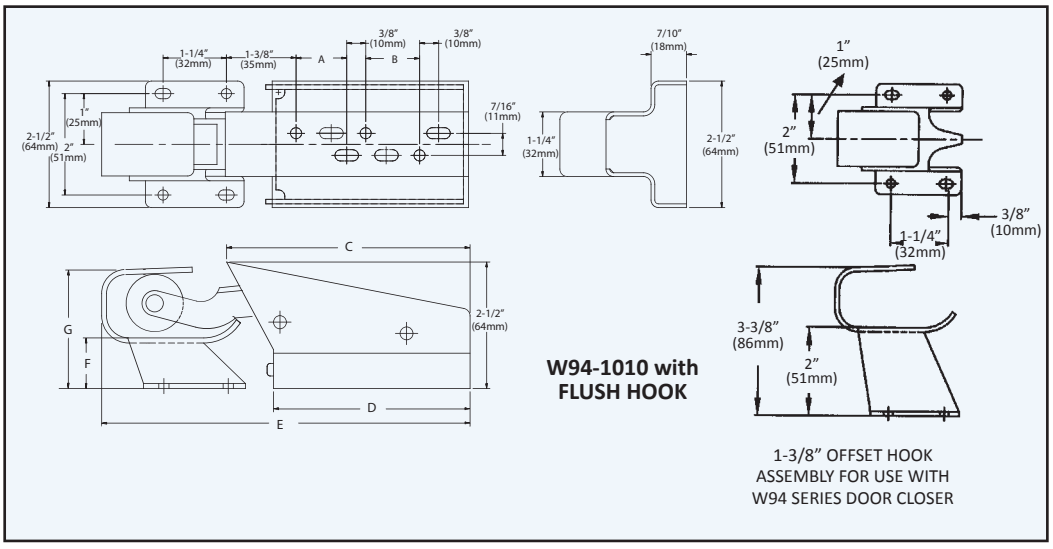

W94-1010/W94-2010

REF.	W94
A	1" (25mm)
B	2-7/16" (62mm)
C	7-7/16" (189mm)
D	6-1/2" (165mm)
E	9-15/16" (252mm)
F	1" (25mm)
G	2-3/8" (60mm)

*May not be identical to competitors' products.

Door Closers for Walk-In Refrigerators & Freezers

COMPONENT

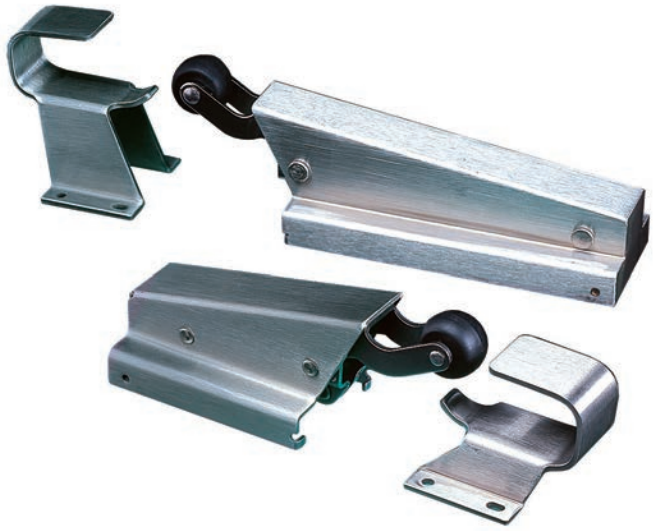

HEAVY-DUTY SPRING ACTION CLOSE-MASTER™

MODEL NO. W95-1010 – Flush Offset, Stainless Steel
MODEL NO. W95-1020 – 1-1/8" (29mm) Offset, Stainless Steel
MODEL NO. W95-1030 – 1-3/8" (35mm) Offset, Stainless Steel
MODEL NO. W95-2010 – Flush Offset, Chrome Plated Steel
MODEL NO. W95-2020 – 1-1/8" (29mm) Offset, Chrome Plated Steel
MODEL NO. W95-2030 – 1-3/8" (35mm) Offset, Chrome Plated Steel

- Close-Master spring action permits fast door closure and positive gasket seal, reducing energy costs
- Concealed Mounting offers clean, tamperproof appearance
- Unique cover design provides for easy installation and concesled mounting
- Cushioned rubber roller and unique spring design offers smooth, quiet, trouble-free operation
- Available in popular flush and 1-1/8" offsets
- Interchangeability - unique concealed mounting hole pattern allows Close-Master to easily replace all existing models in the field
- Re-designed back plate permits easier adjustment during installation and prevents roller arm from hitting top of door
- Mounting template provided

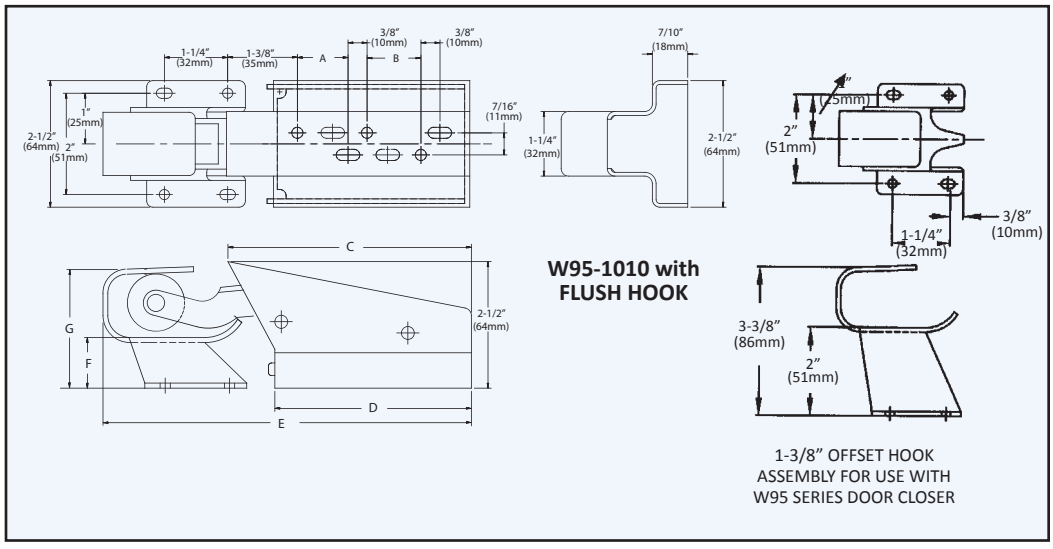

W95-1010/W95-2010

REF.	W95
A	1" (25mm)
B	1-1/16" (27mm)
C	4-13/16" (122mm)
D	3-7/8" (98mm)
E	7-1/4" (184mm)
F	1" (25mm)
G	2-3/8" (60mm)

*May not be identical to competitors' products.

COMPONENT

REFRIGERATOR / FREEZER THERMOMETERS

REF. A

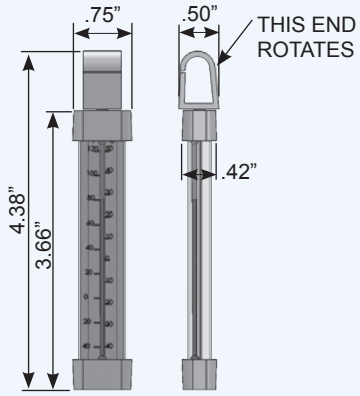

ECONOMICAL REFRIGERATOR / FREEZER THERMOMETER MODEL NO. T90-330

- DUAL SCALE TEMPERATURE RANGE -40° TO 120°F (-40° TO 50°C)
- NON-TOXIC SOLUTION IN COMPLETELY SEALED GLASS TUBE
- HANGS FROM SHELF OR FASTENS PERMANENTLY
- UNIQUE 360° SWIVEL MOUNTING BRACKET

REF. B

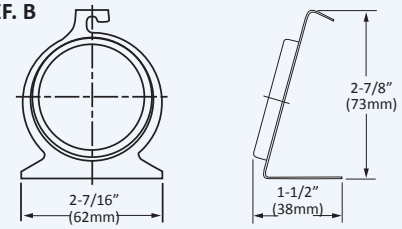

REFRIGERATOR / FREEZER THERMOMETER MODEL NO. T90-25HP

- STAINLESS STEEL FRAME AND BEZEL
- 2" (51mm) DIA. ROUND FACE • CAN HANG OR STAND
- DIAL HAS FOOD ZONES AND 2°F INCREMENTS
- DUAL SCALE TEMPERATURE RANGE -20° TO 80°F (-30° TO 30°C)

REF. C

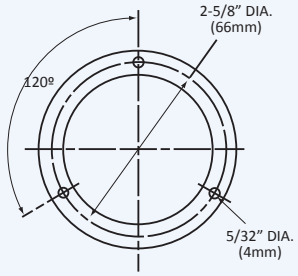

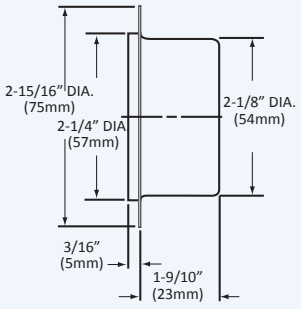

ELECTRONIC BATTERY PANEL MOUNT THERMOMETER MODEL NO. T90-DM120

- STAINLESS STEEL FLUSH MOUNTING REMOTE SENSOR DIGITAL THERMOMETER.
- LARGE 1/2" (13mm) LCD DISPLAY
- 39" (1m) LONG SENSOR CORD
- 1.5 VOLT BATTERY INCLUDED
- TEMPERATURE RANGE -40° TO 120°F

REF. D

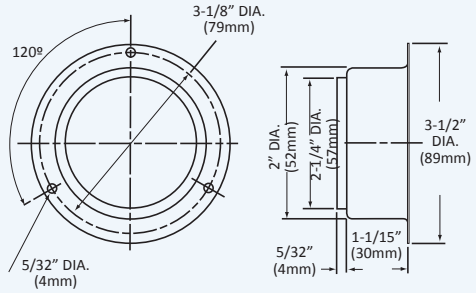

SURFACE MOUNT THERMOMETER MODEL NO. T90-6812

- DUAL SCALE TEMPERATURE RANGE -40° TO 65°F (-40° TO 20°C) • STAINLESS STEEL HOUSING
- 2" DIAL - 3-1/2" FLANGE • RECALIBRATEABLE
- ACCURACY + 2% • 48" CAPILLARY

REF. E

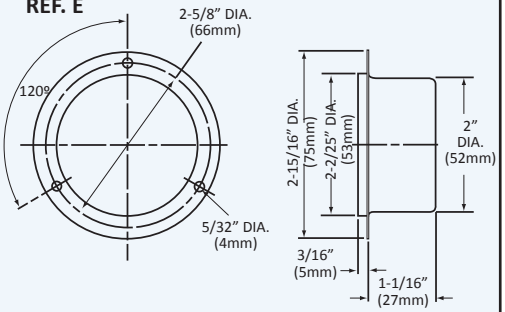

FLUSH FRONT RECESSED MOUNT THERMOMETER MODEL NO. T90-6142

- DUAL SCALE TEMPERATURE RANGE -40° TO 65°F (-40° TO 20°C) • STAINLESS STEEL HOUSING
- ACCURACY + 2% • 2" DIAL - 3" FLANGE
- RECALIBRATEABLE • 48" CAPILLARY

*May not be identical to competitors' products.

Pressure Relief Port for Square Cut Out

COMPONENT

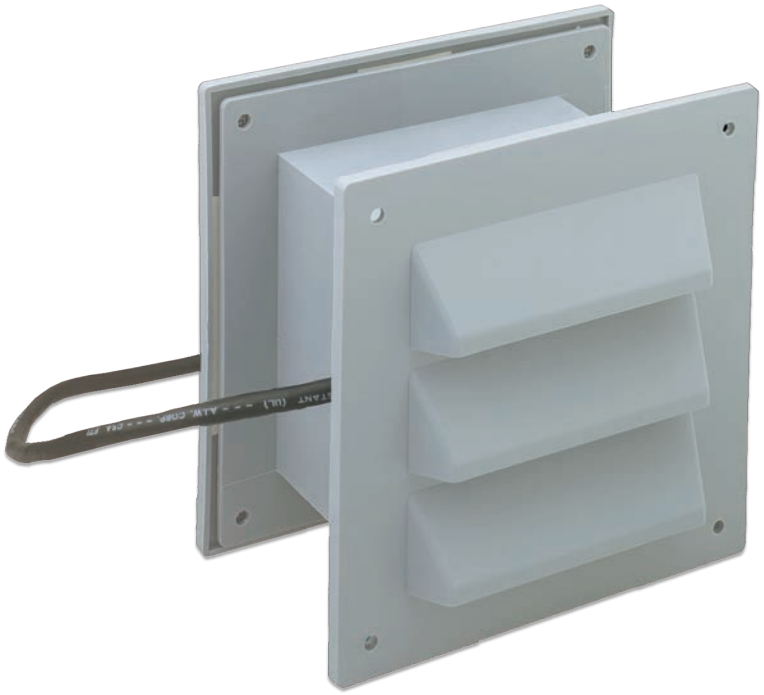

W86 SERIES VENT PORT FOR WALK-IN COOLERS AND FREEZERS

This compact unit provides maximum pressure relief venting by using lightweight, flexible riser flaps that lift with air pressure and return to a sealing position by a gravity memory action. Designed for longevity there are no springs or mechanical components to fatigue or wear out.

- Provides more venting than most competitive models
- Two-way air flow assures instant pressure balance
- Insulated & vermin proof screened openings
- Maintenance free • Easy to install
- Heated models provide frost-free operation which is required for all freezer applications, non-heated models are available for cooler use only • Economically priced

W86 SERIES PRESSURE RELIEF PORT

MODEL NO.	VOLTAGE	APPLICATION
W86-1010	120V/8 Watts with Heater	Freezer
W86-1012	220V/8 Watts with Heater	Freezer
W86-1020	120V/12 Watts with Heater	Freezer
W86-1024-36*	120V/24 Watts with Heater	Freezer
W86-2010	Non-Heated	Cooler

WIRE LEADS 36” (914MM). REPLACES STANDARD KEIL SERIES #2786 WITH COMPONENT HARDWARE QUALITY HARDWARE

File No. LR29496

File No. E73857

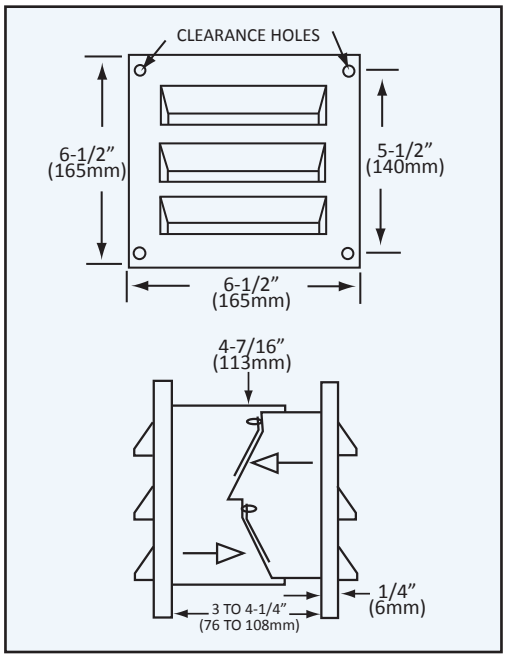

SPECIFICATIONS

MATERIAL: U.L. Recognized Thermoplastic
FINISH: Textured Gray
SCREENING: Aluminum
GASKETS: Neoprene, Closed Cell
WIRE LEADS: TYPE SJ, 18” (457mm) Long

DRILLED FOR #10 SCREWS, INSTALLATION REQUIRES A 4-1/2” (114mm) x 4-1/2” (114mm) OPENING.

*May not be identical to competitors’ products.

Pressure Relief Port for Round Cut Out

COMPONENT

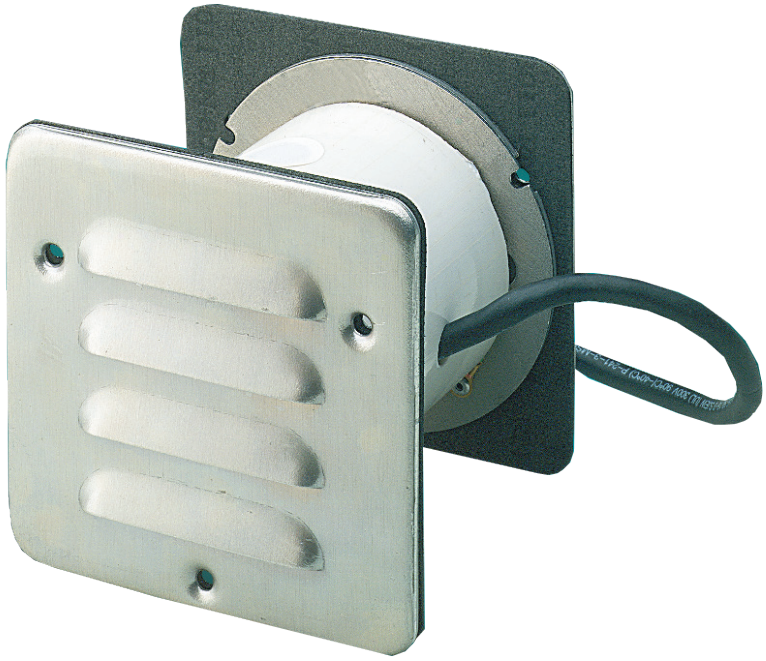

W88 SERIES VENT PORT FOR WALK-IN REFRIGERATORS AND FREEZERS

- Heated vents prevent freeze-ups and reduce cooler condensation
- Two way valve unit allows air flow in dual directions, compensates for expansion and contraction during refrigeration cycles
- Supplied in 120V or 220V Models

PRESSURE RELIEF PORT

MODEL NO.	VOLTAGE	APPLICATION
W88-1010	120V/23 Watts with Heater	FREEZER
W88-1012	220V/23 Watts with Heater	FREEZER
W88-2010	Non-Heated	COOLER

REPLACES* KASON MODEL #1830 & 1834 WITH COMPONENT HARDWARE QUALITY HARDWARE

SPECIFICATIONS

MATERIAL: All Aluminum
INTERNAL SLEEVE: Lexan, Self-extinguishing
FINISH: Textured Aluminum
ELECTRICAL REQUIREMENTS: 120V or 220V Specify voltage requirements
4" (102mm) standard size wall thickness

When ordering specify other wall thickness. Drilled for No. 8 (4mm) screws

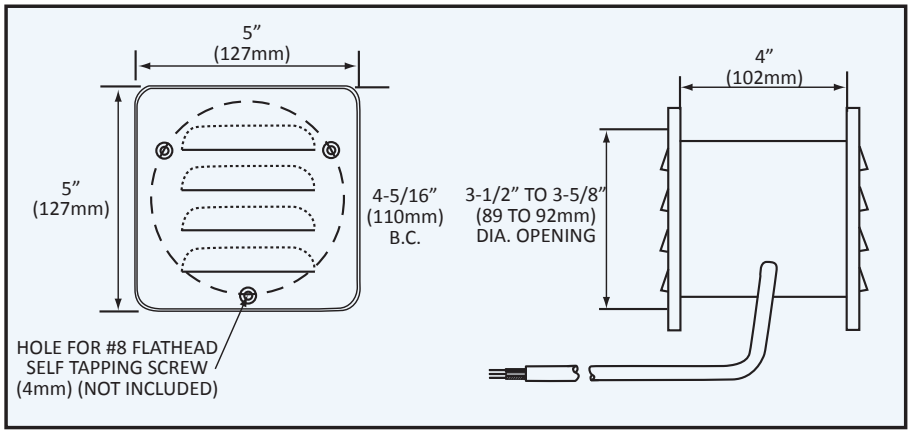

File No. LR29496 File No. E73857

*May not be identical to competitors' products.

COMPONENT

WINDOW VIEWPORTS

WITH ALUMINUM COVER FOR WALK-IN COOLER AND FREEZER APPLICATIONS- AVAILABLE HEATED AND NON-HEATED

• Brushed aluminum frame • Tempered triple pane glass on all models
• Argon filled space between glass on all models for added e-factor and to comply with Energy Independence Act of 2007
• Heated models for 120V/60Hz freezer applications to prevent fogging • Helps to minimize ingress/egress accidents
• Ideal for walk-in cooler/freezer applications and environmental chambers

MODEL NO.	DESCRIPTION	CUT-OUT SIZE	DOOR WIDTH	VOLTAGE (VAC)	CURRENT (Amp)	POWER (Watts)	FREQUENCY (Hz)
W91-1414-HGHF	Argon Gas Filled Space Between 3 Layers of Glass with Heated Frame and Heated Glass	16-15/16" (430mm) Square	3-1/2" (89mm) To 4" (102mm)	120	0.7	84	60
W91-14143-UGUF	Argon Gas Filled Space Between 3 Layers of Glass with Un-Heated Frame and Un-Heated Glass			—	—	—	—
W91-1424-HGHF	Argon Gas Filled Space Between 3 Layers of Glass with Heated Frame and Heated Glass	16-15/16" (430mm) x 26-15/16" (684mm)	3-1/2" (89mm) To 4" (102mm)	120	1.0	120	60
W91-14243-UGUF	Argon Gas Filled Space Between 3 Layers of Glass with Un-Heated Frame and Un-Heated Glass			—	—	—	—

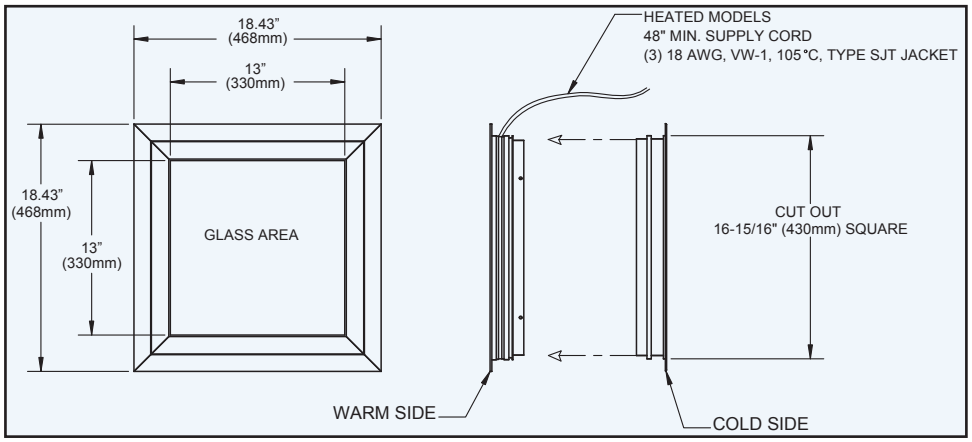

NSF COMPONENT

File No. E73857

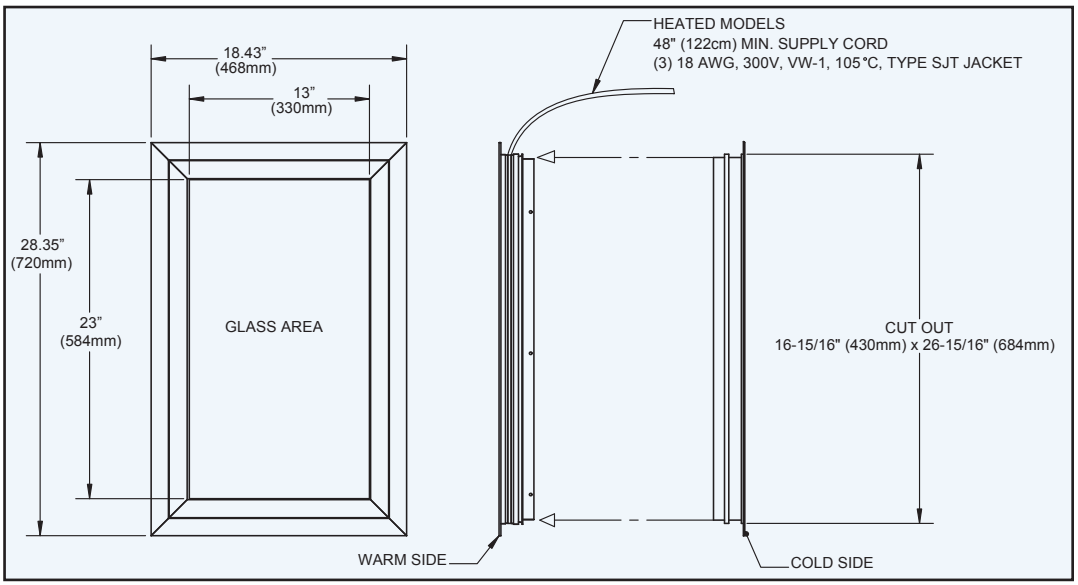

NOTE: Double-sided tape exists all around inside surface of flange.

*May not be identical to competitors' products.

FIP PANEL FASTENERS

FOAMED-IN-PLACE PANEL FASTENERS

Component Hardware® brand Foamed-In-Place (FIP) Panel Fasteners are ideal for use in high volume fabrication operations when consistency and outstanding performance are your driving concerns. This fastening system provides a fool-proof method for accurately positioning, inserting and anchoring the fasteners into your insulated panels, that will save you both time and money

HOW FIP FASTENERS WORK

Simply affix our dedicated panel fastener adapters to your existing foaming jigs to create a permanent anchor point that insures your fasteners are securely and precisely positioned in every foamed panel. The unique design of these adapters guarantees that the locking points and strikes cannot be installed upside down or on the wrong side of the jig, resulting in reduced scrap and production times. In addition, we manufacture these adapters from hardened steel for durability and extended service life.

Attaching FIP panel fasteners to your foaming jig is as simple as snapping the locking points and strikes on to their respective adapters, closing the jig and foaming your panels. All of our FIP fasteners are designed with specially placed holes in the housing to permit foam to completely fill around the fastener for superior pull-out strength and better insulating properties.

THE COMPONENT HARDWARE® DIFFERENCE

Component Hardware® Refrigeration Hardware is known for innovative design, exceptional value and unsurpassed quality. Our products are manufactured to our exacting standards to insure they can withstand the rigorous demands required in commercial refrigeration applications.

We know that panel fasteners are the “glue” that holds your walk-in cooler/freezer together. If they do not function properly, it can result in increased energy consumption or failure of the structural integrity of the entire unit. That’s why all of our panel fasteners undergo rigorous quality inspections to insure our customers of the durability and reliability they have come to know and trust from the Component Hardware® brand.

The next time you are building or specifying a walk-in cooler, freezer or environmental enclosure, be sure that it is made using authentic Component Hardware® brand refrigeration hardware for trouble-free performance and peace of mind.

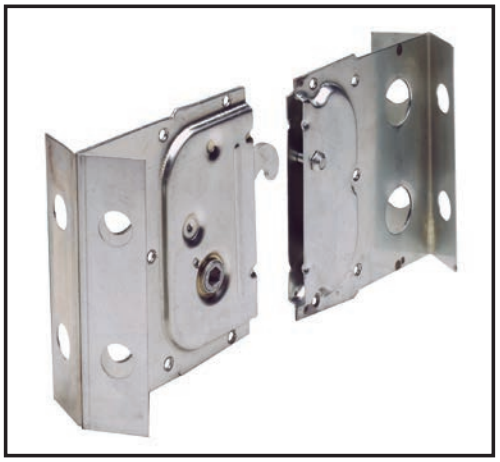

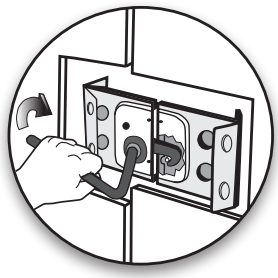

Use Model No. W27-0001-C hexagonal wrench for easy locking of all Component Hardware panel fasteners.

1. Insert outer skin of the panel into the mold.

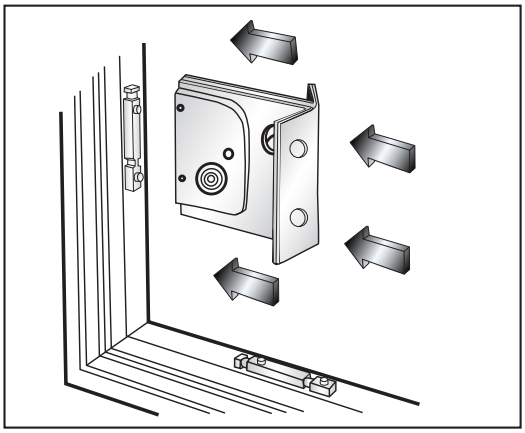

2. Snap fastener (locking point or strike) onto its unique Component Hardware adapter.

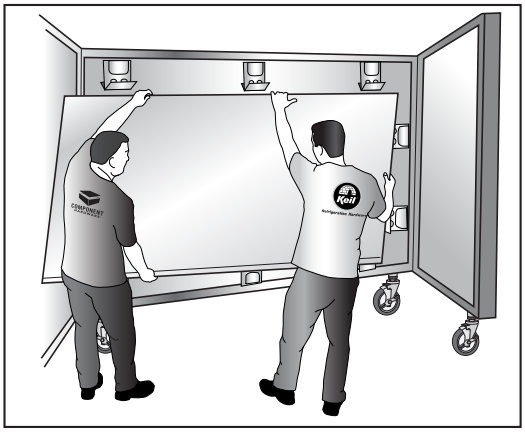

3. Insert inner skin into the mold fixture. Close mold and inject foam.

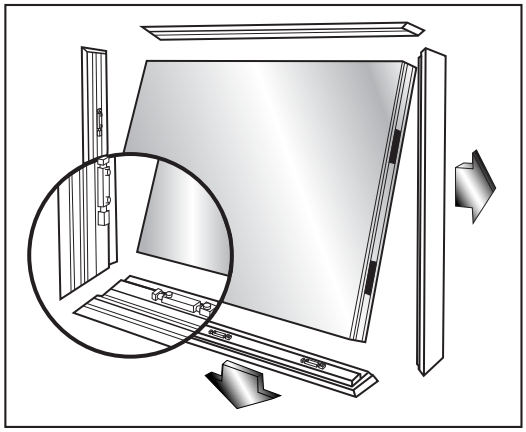

4. After curing, open the mold and retract edge rails. Remove completed panel with fasteners securely in place. Lock panels using Component Hardware Model No. W27-0001-C wrench.

*May not be identical to competitors’ products.

COMPONENT

W27 SERIES
COMPACT FOAMED-IN-PLACE

MODEL NO. W27-7300
LOCKING HOOK

- Friction drive allows hook to slice through foam, locates the female locking pin in mating panel and tightens, providing a positive panel seal
- Zinc plated construction eliminates corrosion concerns and improves mastic adhesion
- Compact construction, superior strength, heavy gauge
- Permits interchangeability of panels

JIG ADAPTER MODEL NO. W27-1173H

MODEL NO. W27-7400
STRIKE

- Interchangeable for use on existing foaming jigs and adapters
- Special guide ribs are built in the female housing which direct the hook to an on-center position
- Offers reliable repeat service and performance
- Large diameter foam holes ensure positive foam integrity

JIG ADAPTER MODEL NO. W27-8804

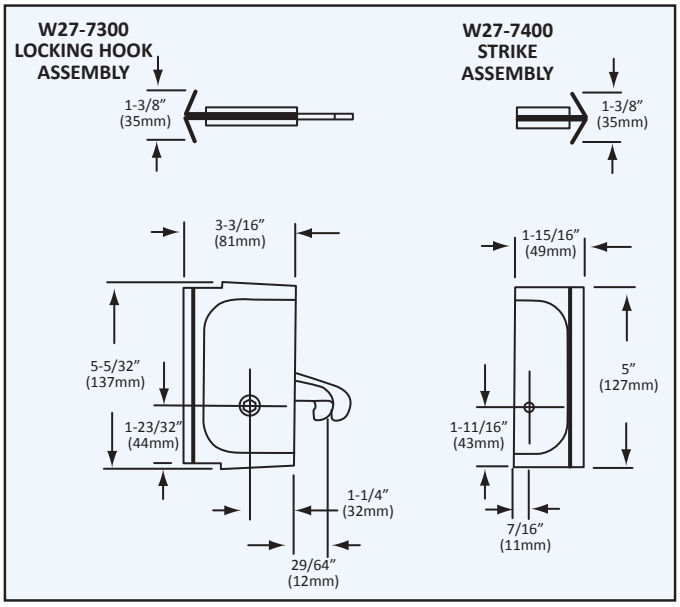

REPLACES* KASON #1173 WITH COMPONENT HARDWARE QUALITY HARDWARE

W27 SERIES
FOAMED-IN-PLACE,
DUAL ACCESS DESIGN

MODEL NO.
W27-8800TT-SP & W27-8800TT-SS
TWIN TUNNEL LOCKING HOOK

MODEL NO.
W27-8801-SP & W27-8801-SS STRIKE

- Unique Twin Tunnel design provides access to either panel side
- Provides a positive panel seal
- Interchangeable-for use on existing foaming jigs and adapters
- Friction drive allows hook to slice through foam, locates the female locking pin in mating panel and tightens
- Heavy gauge, superior strength and economical
- Zinc plated construction eliminates corrosion concerns and improves mastic adhesion
- Standard flush and extended "Twin-Tunnel" cams available
- Plastic tunnel cap included at no extra charge
- Wide fastener wings enhance pull-out strength
- Large diameter foam flow holes ensure positive foam integrity

JIG ADAPTER FOR HOOK: MODEL NO. W27-8803
JIG ADAPTER FOR PIN: MODEL NO. W27-8804

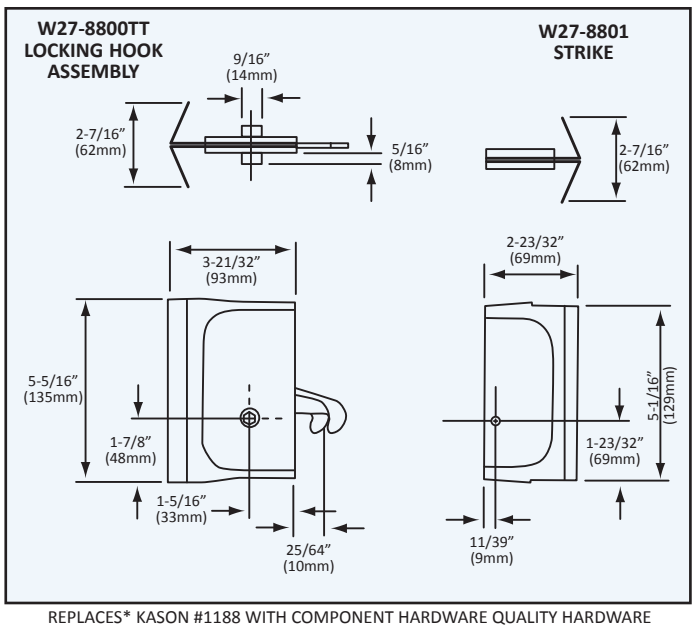

REPLACES* KASON #1188 WITH COMPONENT HARDWARE QUALITY HARDWARE

PANEL FASTENER JIG ADAPTERS

• For foam-in-place applications • Readily replaces* all competitor's adapters having same mounting holes with Component Hardware Quality Hardware • Hardened Steel and Electroplated • Adapters available for ALL Component Hardware Foamed-in-Place Fasteners • Competitive pricing

REF.	MODEL NO.	FITS PANEL FASTENER MODELS
A	**W27-1173H**	W27-7300, 1168BP & 1169BP
B	**W27-8803**	W27-8800TT & 1188BP
C	**W27-8804**	W27-8801, W27-7400 & 1188P

A

B

C

*May not be identical to competitors' products.

COMPONENT

SLAB FOAM PANEL FASTENERS

HOW TO BUILD INSULATED PANELS WITHOUT COSTLY TOOLING

Slab Foam Panel Fasteners are ideal for fabricators looking for a low cost method of constructing light weight insulated panels using Styrene, Styrofoam or urethane sheet stock. These plastic block fasteners are available for 2", 4" & 6" wide panels to accommodate applications including environmental enclosures, walk-in coolers and walk-in freezers.

THE COMPONENT HARDWARE® DIFFERENCE

Component Hardware® Refrigeration Hardware is known for innovative design, exceptional value and unsurpassed quality. Our products are manufactured to our exacting standards to insure they can withstand the rigorous demands required in commercial refrigeration applications.

We know that panel fasteners are the "glue" that holds your walk-in cooler/freezer together. If they do not function properly, it can result in increased energy consumption or failure of the structural integrity of the entire unit. That's why all of our panel fasteners undergo rigorous quality inspections to insure our customers of the durability and reliability they have come to know and trust from the Component Hardware® brand.

The next time you are building or specifying a walk-in cooler, freezer or environmental enclosure, be sure that it is made using authentic Component Hardware® brand refrigeration hardware for trouble-free performance and peace of mind.

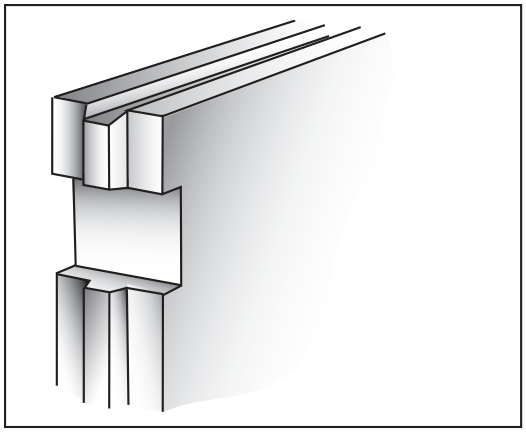

1. Cut insulating material to size. Shape tongue and groove surfaces. Notch panel for fastener.

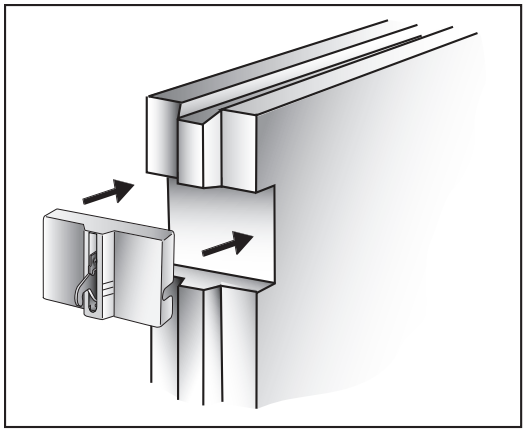

2. Insert plastic housing, either locking point or strike, as needed.

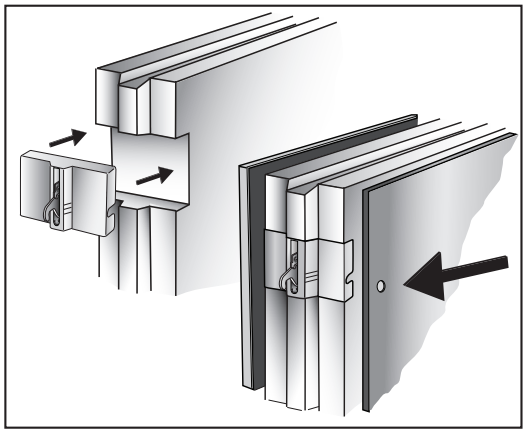

3. Apply adhesive to metal skins. Laminate foam between two skins and apply pressure for bonding. (Return bend on metal helps to hold fastener in place.)

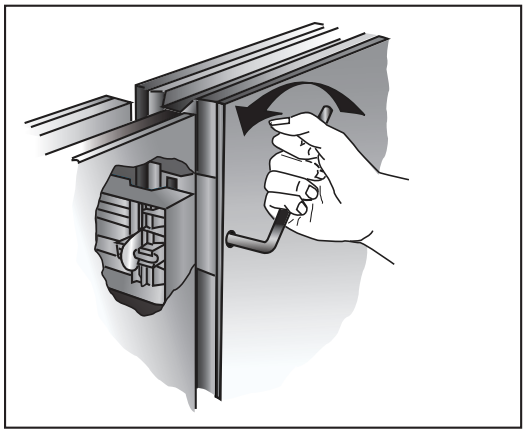

4. After curing, panels are read for assembly. Completed panels are easily locked in position at assembly site using the Component Hardware W27-0001-C.

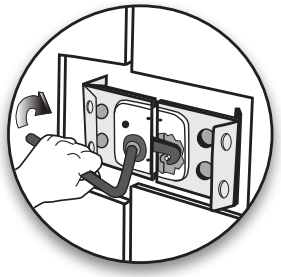

Use Model No. W27-0001-C hexagonal wrench for easy locking of all Component Hardware panel fasteners.

*May not be identical to competitors' products.

Slab Foam Panel Fasteners

COMPONENT

W27 SERIES SLAB FOAM ABS BLOCK

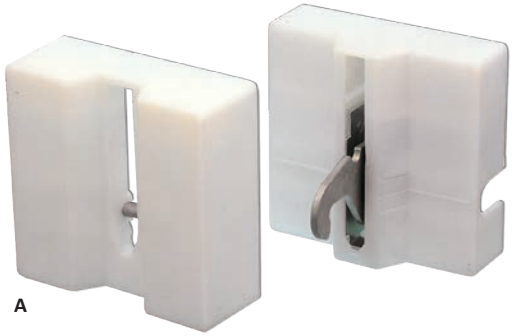

A

C

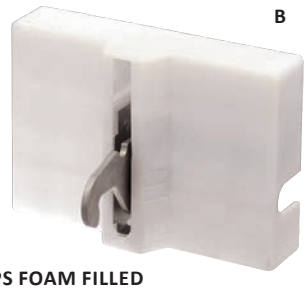

B

EPS FOAM FILLED

PU FOAM FILLED

REF. A

SLAB FOAM ABS BLOCK PANEL FASTENERS

MODEL NO. W27-5204
For Gasketed 4” (102mm) Panels

REF. B

SLAB FOAM ABS BLOCK PANEL FASTENERS with FOAM INSULATED BACKING

MODEL NO. W27-5304
For Gasketed 4” (102mm) Panels
EPS Foam Filled

MODEL NO. W27-5306
For Gasketed 6” (152mm) Panels
PU Foam Filled

REF. C

SLAB FOAM ABS BLOCK PANEL FASTENERS

MODEL NO. W27-5202
For Gasketed 2” (51mm) Panels

• Unbreakable ABS housing, zinc plated heavy gauge steel hook and pin • Permanently attached hook and strike insures integrity and can be activated time and time again • For use with 2”(51mm), 4”(102mm) and 6”(152mm) panels • Economical

W27-5204
FOR GASKETED PANELS
REPLACES* KASON #1152 WITH COMPONENT HARDWARE
QUALITY HARDWARE

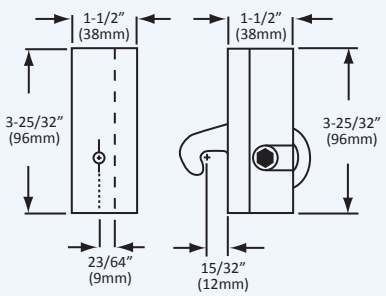

W27-5202
FOR GASKETED PANELS

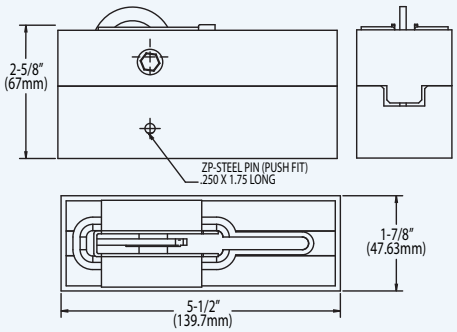

*May not be identical to competitors’ products.

RIGID RAIL PANEL FASTENERS

COMPONENT

DESIGNED ESPECIALLY FOR WOOD, HIGH DENSITY FOAM OR METAL FRAME RAILS

This series of Component Hardware® brand panel fasteners is designed for use with wood, high density foam or metal frame rail insulated panels.

This economical method of producing pre-fabricated insulated panels permits the manufacturer to build panel sections of virtually any size or shape.

We offer a wide array of rigid rail locking points, strikes and pins, which may be combined to accommodate a broad range of panel thicknesses, joint types and rail materials.

THE COMPONENT HARDWARE® DIFFERENCE

Component Hardware® Refrigeration Hardware is known for innovative design, exceptional value and unsurpassed quality. Our products are manufactured to our exacting standards to insure they can withstand the rigorous demands required in commercial refrigeration applications.

We know that panel fasteners are the "glue" that holds your walk-in cooler/freezer together. If they do not function properly, it can result in increased energy consumption or failure of the structural integrity of the entire unit. That's why all of our panel fasteners undergo rigorous quality inspections to insure our customers of the durability and reliability they have come to know and trust from the Component Hardware® brand.

The next time you are building or specifying a walk-in cooler, freezer or environmental enclosure, be sure that it is made using authentic Component Hardware® brand refrigeration hardware for trouble-free performance and peace of mind.

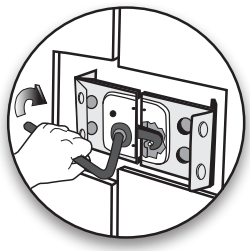

Use Model No. W27-0001-C hexagonal wrench for easy locking of all Component Hardware panel fasteners.

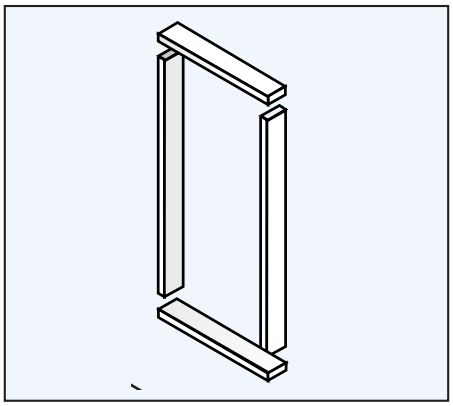

1. Cut frame material to form panel perimeter.

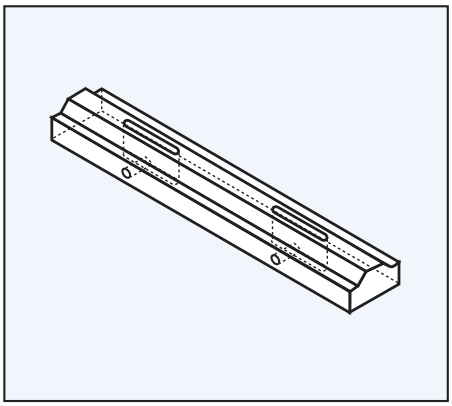

2. Determine locations for fasteners and mortise, dado, or rout slots. Drill wrench holes. (If using W27-5501/5502, drill pin holes.)

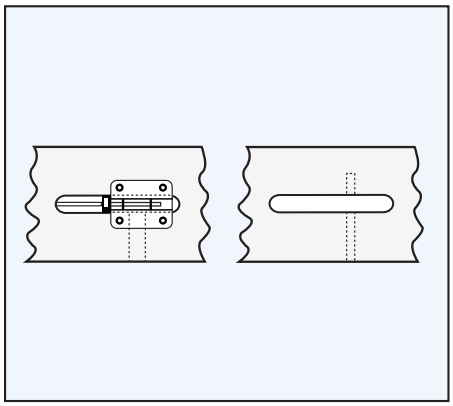

3a. Place fastener in slot and nail or staple in place.
3b. If using W27-5501/5502 pin, insert in drilled pin holes. (Taping of back may be required when foaming.)

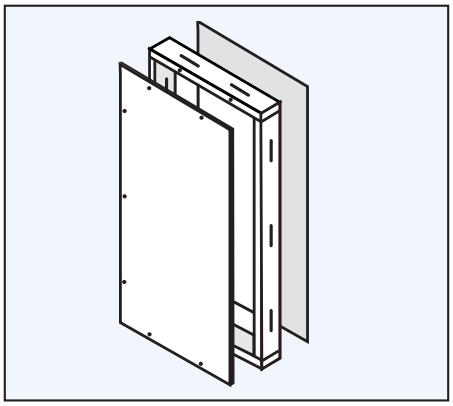

4. Assemble frame with panel skins.

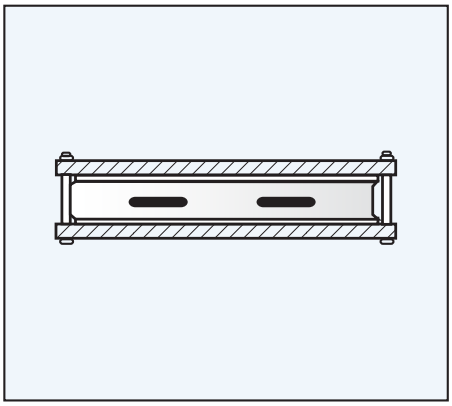

5. Clamp panel in restraining fixture and inject foam.

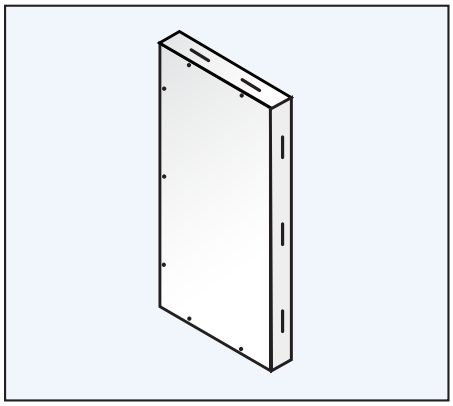

6. The finished panels are ready for fast, easy joining using W27-0001-C wrench.

*May not be identical to competitors' products.

COMPONENT

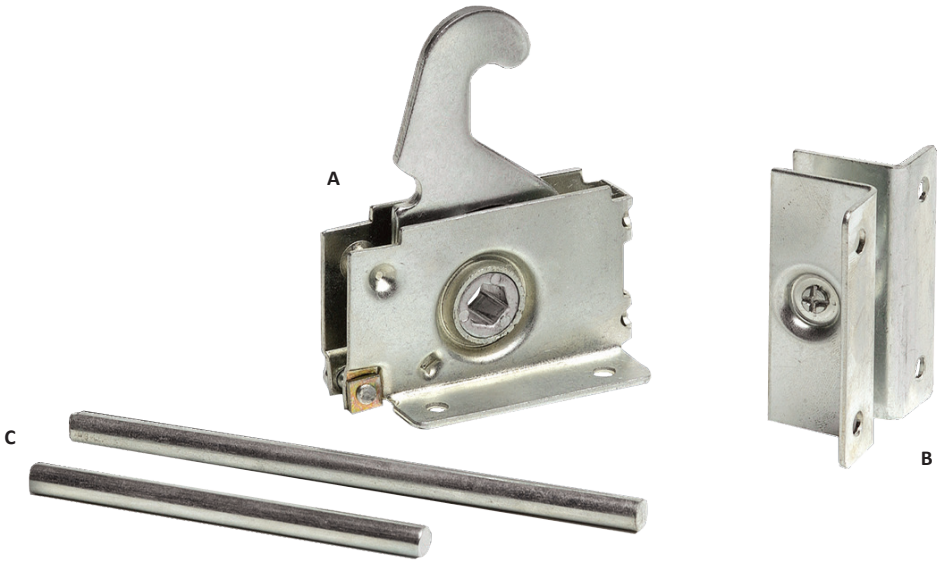

W27 SERIES WOOD FRAME AND METAL FRAME

MODEL NO.
W27-5600A & W27-5600B
LOCKING HOOK

MODEL NO.	X	Y
W27-5600A	1-7/16" (37mm)	1-31/32" (50mm)
W27-5600B	1-7/16" (37mm)	2-11/32" (60mm)

- Zinc plated
- Ideal for wood, high density rail or metal frame construction
- Stamped holes provided for easy mounting with staple, screw or nails
- Heavy-duty steel housing
- Assorted offset strike assemblies or strike pins available
- Economical

MODEL NO.
W27-55 SERIES
LOCKING STRIKE

MODEL NO.	"A" OFFSET
W27-5550	1/2" (13mm)
W27-5562	5/8" (16mm)
W27-5568	11/16" (17mm)
W27-5575	3/4" (19mm)
W27-5581	13/16" (21mm)

REF. A
W27-5600A & W27-5600B
LOCKING HOOK

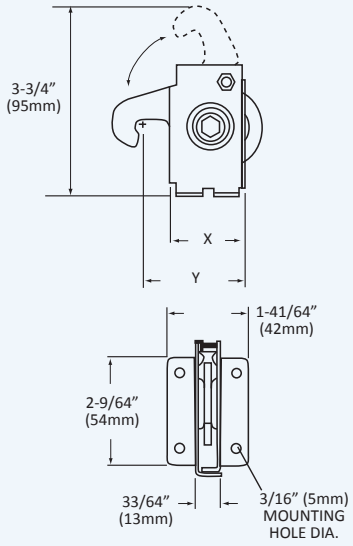

REPLACES* KASON #1156A & 1156B WITH COMPONENT HARDWARE QUALITY HARDWARE

REF. B
W27-55xx
LOCKING STRIKE

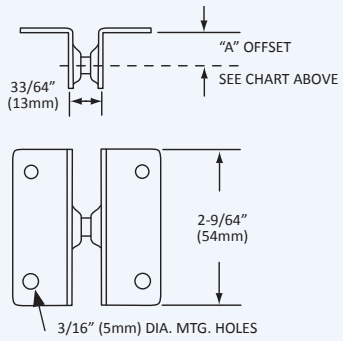

REPLACES* KASON #1155 WITH COMPONENT HARDWARE QUALITY HARDWARE

REF. C **W27-5501 PIN, SHORT**
3-1/4" (82mm) x 1/4" (6mm) DIA.
REPLACES* WITH KASON #1156-36
WITH COMPONENT HARDWARE QUALITY HARDWARE

W27-5502 PIN, LONG
4-3/4" (120mm) x 1/4" (6mm) DIA.

*May not be identical to competitors' products.

COMPONENT

A

E

B

F

C

D

ACCESSORIES FOR WALK-IN REFRIGERATION & FREEZERS

REF. A

CAULKING GUN

For Use with
10.3 oz (305ml) cartridges

MODEL NO. Q99-1000

REF. B

SILICONE SEALER

File No. E224060

- Fits all standard caulking guns
- F.D.A. APPROVED
- U.L. RECOGNIZED
- MEETS F.D.A. EXTRACTION REQUIREMENT
- Silicone Sealant 10.3 oz (305ml) cartridge
- Supplied with removable tip

MODEL NO.	COLOR	MAXIMUM SERVICE TEMP.
M90-1010	CLEAR	400°F (232°C)
M90-1012	ALUMINUM	400°F (232°C)

Sold in case quantities – 12 tubes per case

REF. C

HEX WRENCH

MODEL NO. W27-0001-C
MODEL NO. W27-0001-CTS*
*Hex wrench with rubber sleeve

- 6" x 6" (152mm x 152mm)
- Hardened steel
- For use with W27 series panel fasteners
- Readily replaces competitors' wrenches

REF. D

SNAP-IN FINISHING CAP

MODEL NO. W27-0002-C

- 3/4" diameter
- Max hole diameter 49/64"
- Grey polyethylene
- For use with W27 series panel fastener
- Covers wrench holes for clean appearance

REF. E

SNAP-ON MOULDING

- Stainless steel cover with galvanized back plate
- Ideal for use as a back-up plate for gaskets around door jam

MODEL NO.	WIDTH
J60-2220*	1/2" (13mm)
J60-2240	3/4" (19mm)
J60-2260	1" (25mm)
J60-2270	1-1/4" (32mm)
J60-2320*	2" (51mm)

12 FT. (3657mm) LENGTHS *NON-STOCK ITEM AVAILABLE ON APPLICATION SPECIAL LENGTHS AVAILABLE UPON REQUEST

REF. F

PRESSURE SENSITIVE INDUSTRIAL TAPE

MODEL NO.	DESCRIPTION	SIZE	CASE QTY
Q84-1200	MASKING TAPE	2" x 60 YDS (51mm x 54m)	24 CASE

*May not be identical to competitors' products.

Index

MODEL NO.	PAGE NO.
FIP-PANEL FASTENERS	EE21
J60-2220	EE27
J60-2240	EE27
J60-2260	EE27
J60-2270	EE27
J60-2320	EE27
M90-1010	EE27
M90-1012	EE27
Q84-1200	EE27
Q99-1000	EE27
RIGID RAIL-PANEL FASTENERS	EE25
R55-1010	EE14
R55-1020	EE14
SLAB FOAM-PANEL FASTENERS	EE23
T90-DM120	EE17
T90-330	EE17
T90-25HP	EE17
T90-6142	EE17
T90-6812	EE17
W19-1000	EE2
W19-1000-C	EE2
W19-1000-SN	EE2
W19-1000-C-SN	EE2
W19-1500	EE2
W19-1500-C	EE2
W19-2000	EE2
W19-2000-C	EE2
W27-0001-C	EE27
W27-0001-CTS	EE27
W27-0002-C	EE27
W27-1173H	EE22
W27-5202	EE24
W27-5204	EE24
W27-5304	EE24
W27-5306	EE24
W27-5501	EE26
W27-5502	EE26
W27-5550	EE26
W27-5562	EE26
W27-5568	EE26
W27-5575	EE26
W27-5581	EE26
W27-5600A	EE26
W27-5600B	EE26
W27-7300	EE22
W27-7400	EE22
W27-8801-SP	EE22
W27-8801-SS	EE22
W27-8800TT-SP	EE22
W27-8800TT-SS	EE22
W27-8803	EE22
W27-8804	EE22
W28-1000	EE5,EE8
W28-1200	EE5
W28-2215-SSX	EE8
W28-2300-SSX	EE4, EE8
W28-2325X	EE4
W28-2400X	EE4
W28-2400-SSX	EE4
W28-2600X	EE4

MODEL NO.	PAGE NO.4
W28-2605	EE4
W28-2800X	EE4
W28-3400X	EE4
W28-3800X	EE4
W29-1000X	EE1
W29-2000	EE1
W29-5000-4X	EE5
W30-1000	EE1
W30-1000-L	EE1
W30-2000	EE1
W30-2000-L	EE1
W31-1000X	EE1
W37-3000-SS	EE8
W38-1000	EE3
W38-1000-C	EE3,EE8
W38-1000-C-GE	EE8
W38-1000-SN	EE3
W38-1000-C-SN	EE3
W38-1500	EE3
W38-1500-C	EE3
W38-1500-SN	EE3
W38-1500-C-SN	EE3
W38-1600LSSGE	EE8
W38-2000	EE3
W38-2000-C	EE3
W38-4216LSSGE	EE8
W38-6000-C-GE	EE8
W50-1000	EE2
W55-0001	EE14
W55-1000	EE14
W56-1000	EE14
W58-1000	EE12
W58-1012	EE12
W58-1025	EE12
W58-1037	EE12
W58-1112	EE12
W58-1125	EE12
W58-1137	EE12
W58-1150	EE12
W58-1162	EE12
W58-1175	EE12
W58-1187	EE12
W58-1200	EE12
W58-2000	EE12
W58-2012	EE12
W58-2025	EE12
W58-2037	EE12
W58-2112	EE12
W58-2125	EE12
W58-2137	EE12
W58-2150	EE12
W58-2162	EE12
W58-2175	EE12
W58-2187	EE12
W58-2200	EE12
W58-3000	EE12
W58-3012	EE12
W58-3025	EE12
W58-3037	EE12
W58-3112	EE12
W58-3125	EE12
W58-3137	EE12

MODEL NO.	PAGE NO.
W58-3150	EE12
W58-3162	EE12
W58-3175	EE12
W58-3187	EE12
W58-3200	EE12
W58-4000	EE12
W58-4012	EE12
W58-4025	EE12
W58-4037	EE12
W58-4112	EE12
W58-4125	EE12
W58-4137	EE12
W58-4150	EE12
W58-4162	EE12
W58-4175	EE12
W58-4187	EE12
W58-4200	EE12
W59-1000	EE13
W59-1012	EE13
W59-1025	EE13
W59-1037	EE13
W59-1112	EE13
W59-1125	EE13
W59-1137	EE13
W59-1150	EE13
W59-1162	EE13
W59-1175	EE13
W59-1187	EE13
W59-1200	EE13
W59-2000	EE13
W59-2012	EE13
W59-2025	EE13
W59-2037	EE13
W59-2112	EE13
W59-2125	EE13
W59-2137	EE13
W59-2150	EE13
W59-2162	EE13
W59-2175	EE13
W59-2187	EE13
W59-2200	EE13
W59-3000	EE13
W59-3012	EE13
W59-3025	EE13
W59-3037	EE13
W59-3112	EE13
W59-3125	EE13
W59-3137	EE13
W59-3150	EE13
W59-3162	EE13
W59-3175	EE13
W59-3187	EE13
W59-3200	EE13
W59-4000	EE13
W59-4012	EE13
W59-4025	EE13
W59-4037	EE13
W59-4112	EE13
W59-4125	EE13
W59-4137	EE13
W59-4150	EE13
W59-4162	EE13

MODEL NO.	PAGE NO.
W59-4175	EE13
W59-4187	EE13
W59-4200	EE13
W60-1000	EE9
W60-1000-S	EE9
W60-1012	EE9
W60-1012-S	EE9
W60-1025	EE9
W60-1025-S	EE9
W60-1037.	EE9
W60-1037-S	EE9
W60-1112	EE9
W60-1125	EE9
W60-1137	EE9
W60-1150	EE9
W60-1162	EE9
W60-1175	EE9
W60-1187	EE9
W60-1200	EE9
W60-2000	EE9
W60-2025	EE9
W60-2112	EE9
W60-2137	EE9
W61-1000	EE11
W61-1012	EE11
W61-1025	EE11
W61-1037	EE11
W61-1112	EE11
W61-1125	EE11
W61-1137	EE11
W61-1150	EE11
W61-1162	EE11
W61-1175	EE11
W61-1187	EE11
W61-1200	EE11
W61-2000	EE11
W61-2012	EE11
W61-2025	EE11
W61-2037	EE11
W61-2112	EE11
W61-2125	EE11
W61-2137	EE11
W61-2150	EE11
W61-2162	EE11
W61-2175	EE11
W61-2187	EE11
W61-2200	EE11
W61-3000	EE11
W61-3012	EE11
W61-3025	EE11
W61-3037	EE11
W61-3112	EE11
W61-3125	EE11
W61-3137	EE11
W61-3150	EE11
W61-3162	EE11
W61-3175	EE11
W61-3187	EE11
W61-3200	EE11
W61-4000	EE11
W61-4012	EE11
W61-4025	EE11

Index

MODEL NO.	PAGE NO.
W61-4037	EE11
W61-4112	EE11
W61-4125	EE11
W61-4137	EE11
W61-4150	EE11
W61-4162	EE11
W61-4175	EE11
W61-4187	EE11
W61-4200	EE11
W62-0001	EE10
W62-2001	EE10
W77-1375	EE10
W77-1625	EE10
W86-1010	EE18
W86-1012	EE18
W86-1020	EE18
W86-1024-36	EE18
W86-2010	EE18
W88-1010	EE19
W88-1012	EE19
W88-2010	EE19
W91-1414-HGHF	EE20
W91-14143-UGUF	EE20
W91-1424-HGHF	EE20
W91-14243-UGUF	EE20
W94-1010	EE15
W94-1020	EE15
W94-2010	EE15
W94-2020	EE15
W95-1010	EE16
W95-1020	EE16
W95-1030	EE16
W95-2010	EE16
W95-2020	EE16
W95-2030	EE16
W99-0100-H	EE8
W99-0100-L	EE8
W99-2001	EE9
W99-2001-GE	EE7
W99-2063	EE8
W99-2063-GE	EE8
W99-3800-SS	EE7
W99-3800-SS-C	EE7
W99-3815-SS	EE7
W99-3815-SS-C	EE7
W99-3820-SS	EE7
W99-4100-SSLH	EE6
W99-4100-SSRH	EE6
W99-6015-SS	EE6

MODEL NO.	PAGE NO.

MODEL NO.	PAGE NO.

MODEL NO.	PAGE NO.

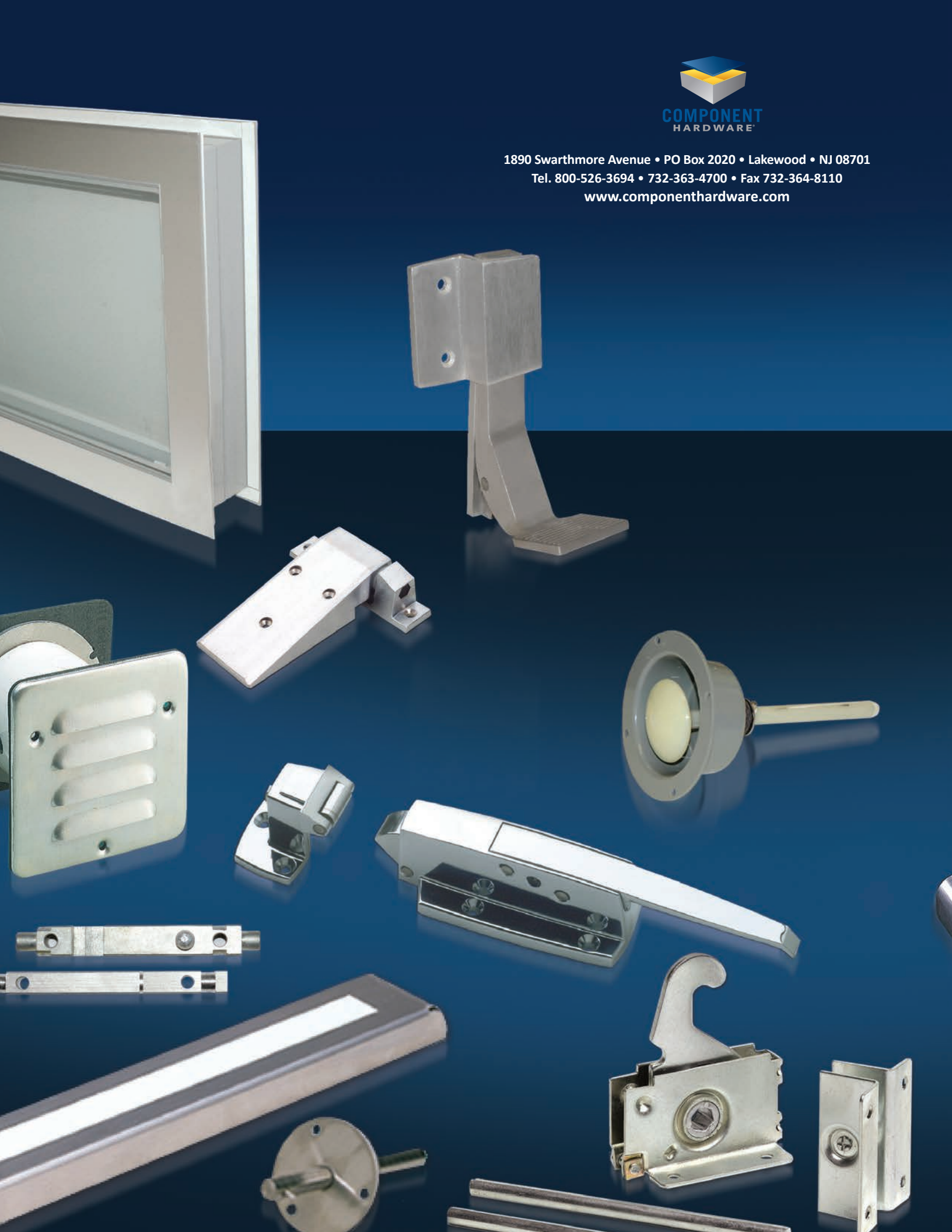

COMPONENT HARDWARE®

1890 Swarthmore Avenue • PO Box 2020 • Lakewood • NJ 08701
Tel. 800-526-3694 • 732-363-4700 • Fax 732-364-8110
www.componenthardware.com